microsonic
Ultrasonic Sensors

Instruction manual
mic+ Ultrasonic Sensors with two switched outputs

mic+25/DD/TC	mic+25/EE/TC
mic+35/DD/TC	mic+35/EE/TC
mic+130/DD/TC	mic+130/EE/TC
mic+340/DD/TC	mic+340EE/TC
mic+600/DD/TC	mic+600/EE/TC

Product description

- The mic+sensor with two switched outputs measures the distance to an object within the detection zone contactless. Depending on the adjusted detect distance the switched outputs are set.
- All settings are done with two push-buttons and a three-digit LED-display (TouchControl).
- Light emitting diodes (three-colour LEDs) indicate the switching status.
- The output functions are changeable from NOC to NCC.
- The sensors are adjustable manually using the numerical LED-display or may be trained using Teach-in processes.
- Useful additional functions are set in the Add-on-menu.
- Using the LinkControl adapter (optional accessory) all TouchControl and additional sensor parameter settings may be made by a Windows-Software.

Important instructions for assembly and application

All employee and plant safety-relevant measures must be taken prior to assembly, start-up, or maintenance work (see operation manual for the entire plant and the operator instruction of the plant).

The sensors are not considered as safety equipment and may not be used to ensure human or machine safety!

The mic+ sensors indicate a **blind zone**, in which the distance cannot be measured. The **operating range** indicates the distance of the sensor that can be applied with normal reflectors with sufficient function reserve. When using good reflectors, such as a calm water surface, the sensor can also be used up to its **maximum range**. Objects that strongly absorb (e.g. plastic foam) or diffusely reflect sound (e.g. pebble stones) can also reduce the defined operating range.

Synchronisation

If the assembly distances shown in Fig.1 for two or more sensors are exceeded the integrated synchronisation should be used. Connect Sync/Com-channels (pin 5 at the units receptable) of all sensors (10 maximum).

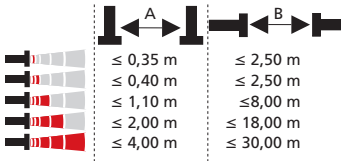

Fig. 1: Assembly distances, indicating synchronisation/multiplex

Multiplex mode

The Add-on-menu allows to assign an individual address »01« to »10« to each sensor connected via the Sync/Com-channel (Pin5). The sensors perform the ultrasonic measurement sequentially from low to high address. Therefore any influence between the sensors is rejected.

The address »00« is reserved to synchronisation mode and deactivates the multiplex mode. (To use synchronised mode all sensors must be set to address »00«.)

Assembly instructions

☞ Assemble the sensor at the installation location.

☞ Plug in the connector cable to the M 12 connector.

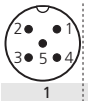

		colour
1	$+U_B$	brown
3	$-U_B$	blue
4	D2	black
2	D1	white
5	Sync/Com.	grey

Fig. 2: Pin assignment with view onto sensor plug and colour coding of the microsonic connection cable

Start-up

mic+ sensors are delivered factory made with the following settings:

- Switched outputs on NOC
- Detecting distances at operating range and half operating range
- Measurement range set to maximum range

Set the parameters of the sensor manually or use the Teach-in procedure to adjust the detect points.

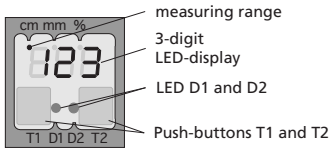

Fig. 3: TouchControl

Operation

mic+sensors work maintenance free. Small amounts of dirt on the surface do not influence function. Thick layers of dirt and caked-on dirt affect sensor function and therefore must be removed.

Note

- mic+sensors have internal temperature compensation. Because the sensors heat up on their own, the temperature compensation reaches its optimum working point after approx. 30 minutes of operation.
- During normal mode operation, a yellow LED signals that the corresponding switched output has connected.
- During normal mode operation, the measured distance value is displayed on the LED-indicator in mm (up to 999 mm) or cm (from 100 cm). Scale switches automatically and is indicated by a point on top of the digits.
- During Teach-in mode, the hysteresis loops are set back to factory settings.
- If no objects are placed within the detection zone the LED-indicator shows »- - -«.
- If no push-buttons are pressed for 20 seconds during parameter setting mode the made changes are stored and the sensor returns to normal mode operation.
- You can lock the key pad to provide inputs, see »Key lock and factory setting«.
- You can reset the factory settings at any time, see »Key lock and factory setting«.

Show parameters

Tapping push-button T1 shortly during normal mode operation shows »PAr« on the LED-display. Each time you tap push-button T1 the actual settings of the switched outputs are shown.

Set sensor parameters alternatively numerically using LED-display...

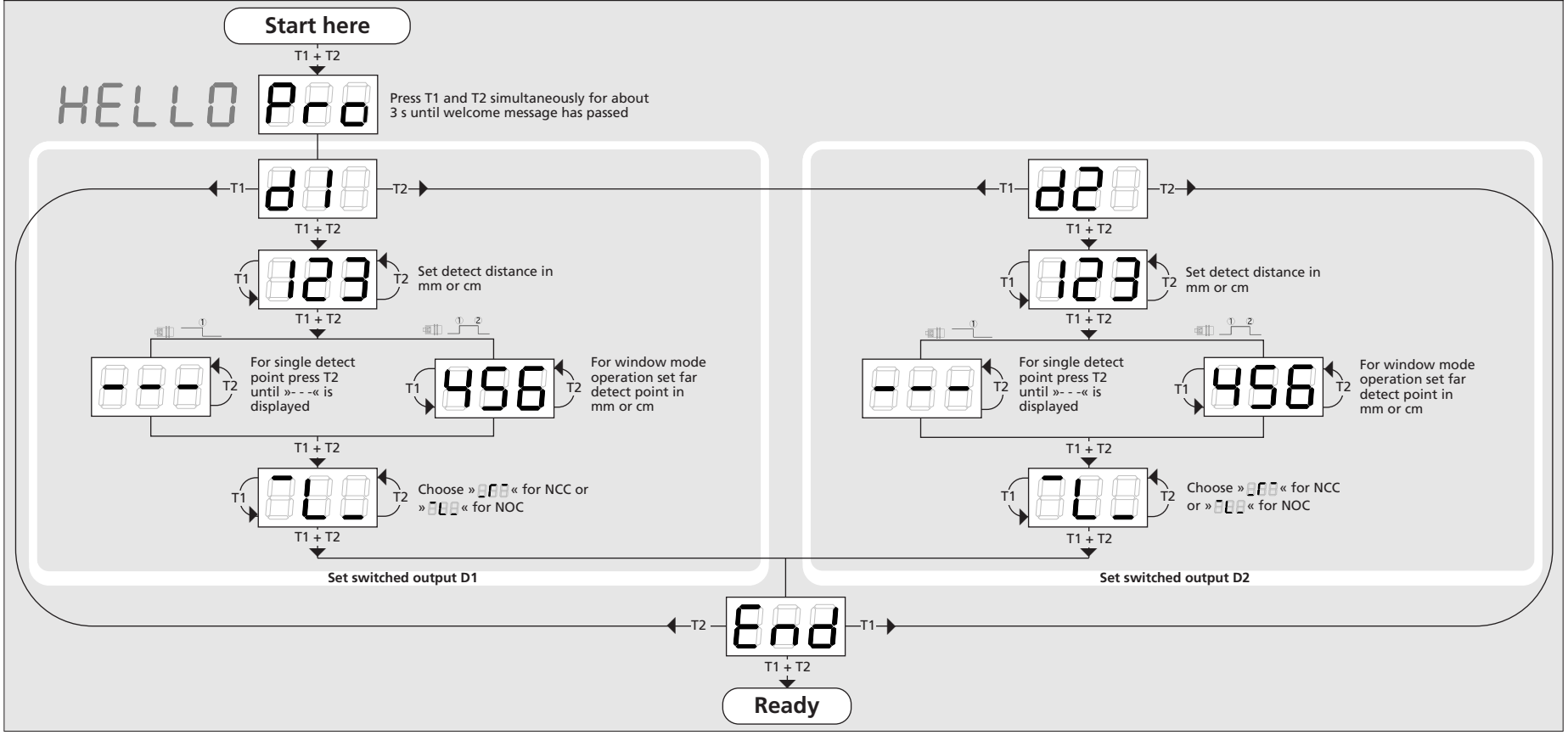

CE 2004/108/EC

...or with the Teach-in procedure

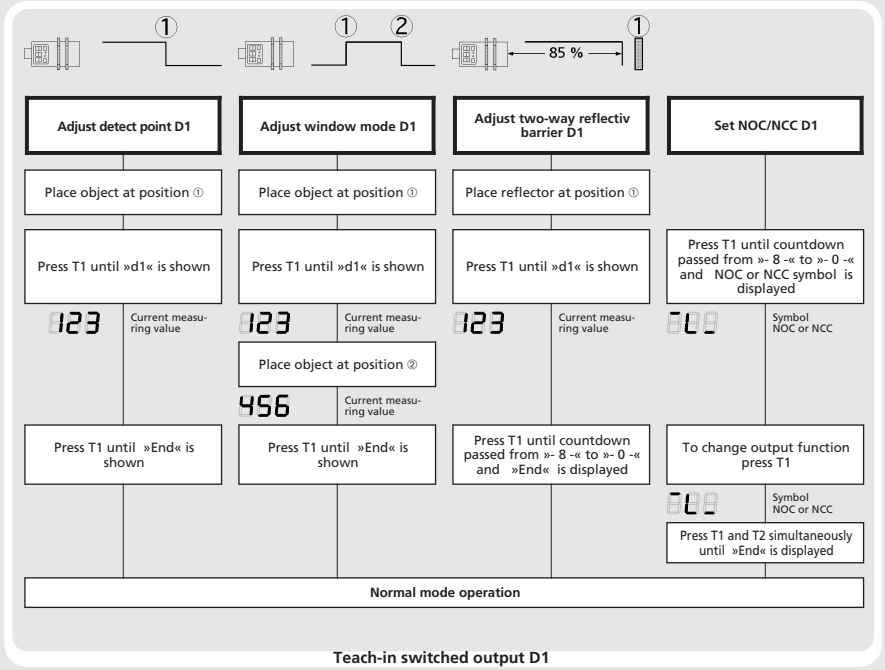

Teach-in switched output D1

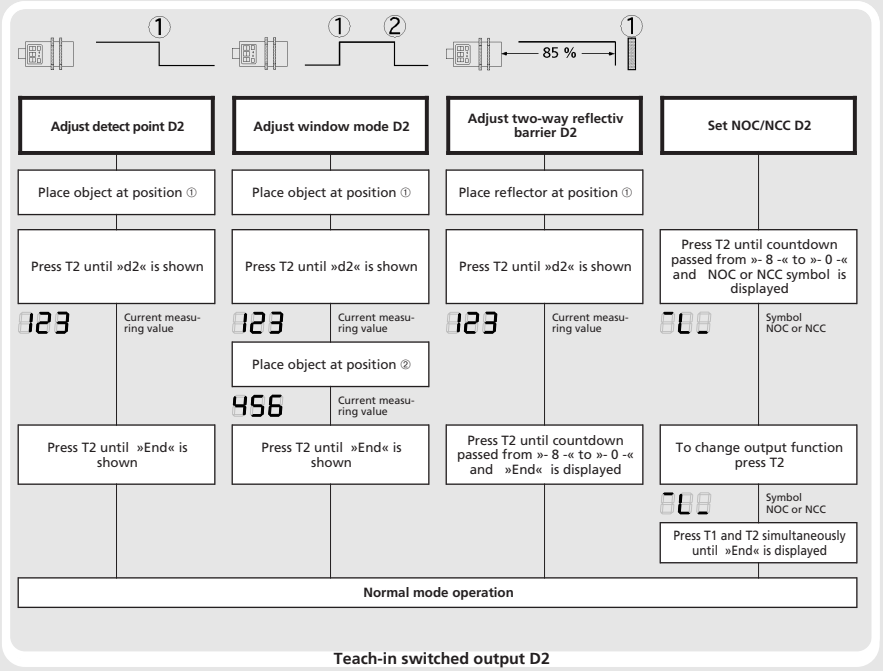

Teach-in switched output D2

Key lock and factory setting

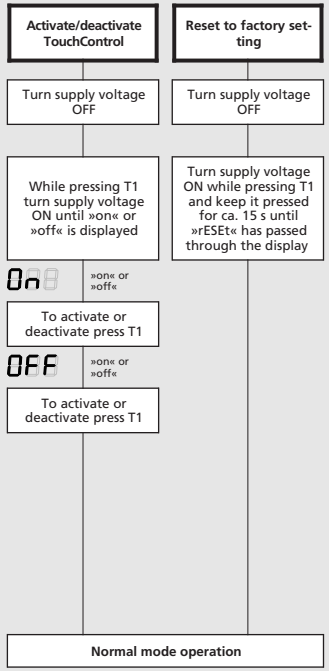

Usefull additional functions in Add-on menu (for experienced users only, settings not required for standard applications)

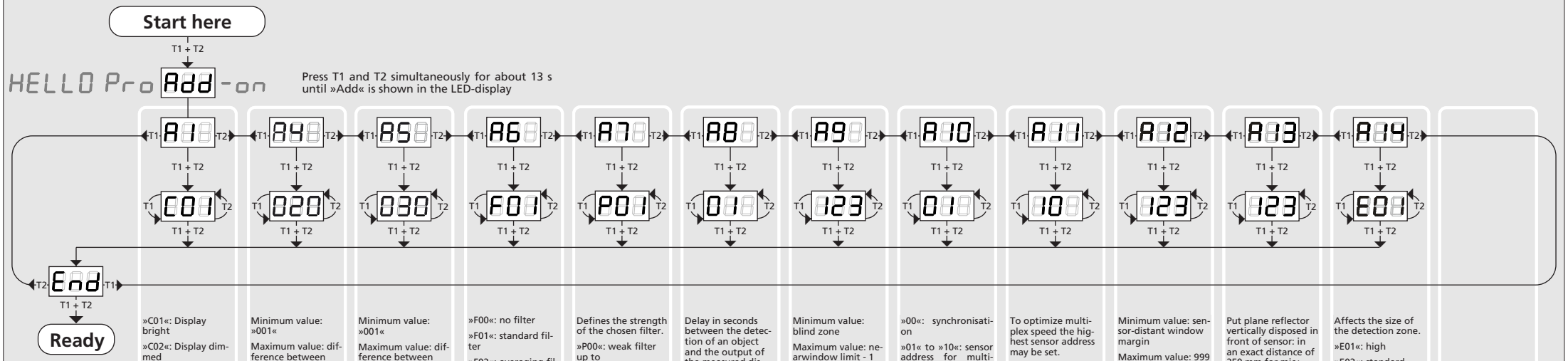

Note
Changes in the Add-on menu may impair the sensor function.
A6, A7, A8 , A10 , A11, A12 have influence on the response time of the sensor.

Low power mode
»C01«: Display bright
»C02«: Display dimmed
»C03«: Display off

Hysteresis switched output D1
Minimum value: »001«
Maximum value: difference between maximum range and detect point - 1
During window mode operation hysteresis influences both detect points.

Hysteresis switched output D2
Minimum value: »001«
Maximum value: difference between maximum range and detect point - 1
During window mode operation hysteresis influences both detect points.

Measurement filter
»F00«: no filter
»F01«: standard filter
»F02«: averaging filter
»F03«: foreground filter
»F04«: background filter

Filter strength
Defines the strength of the chosen filter.
»P00«: weak filter up to
»P09«: strong filter

Response time
Delay in seconds between the detection of an object and the output of the measured distance in case of object approach (behaves as on-delay).
"00": 0 s (no delay) up to
"20": 20 s response time

Foreground suppression
Minimum value: blind zone
Maximum value: nearwindow limit - 1

Multiplex mode device addressing
»00«: synchronisation
»01« to »10«: sensor address for multiplex mode
»oFF«: synchronisation deactivated

Multiplex mode highest address
To optimize multiplex speed the highest sensor address may be set.
Setting range »01« to »10«

Measurement range
Minimum value: sensor-distant window margin
Maximum value: 999 mm for mic+ 25/...,mic+35/..., 999 cm for mic+ 130/...,mic+340/..., mic+600/...

Calibration display
Put plane reflector vertically disposed in front of sensor: in an exact distance of 250 mm for mic+ 25... and mic+35... and 900 mm for all other typs.
Adjust display to 250 mm or 900 mm.
Confirm calibration with T1 + T2.

Detection zone sensitivity
Affects the size of the detection zone.
»E01«: high
»E02«: standard
»E03«: slight

Technical data

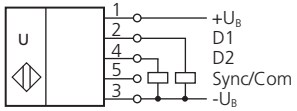

2 pnp switched outputs

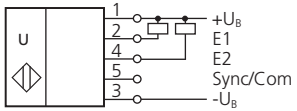

2 npn switched outputs

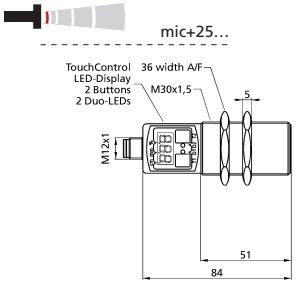

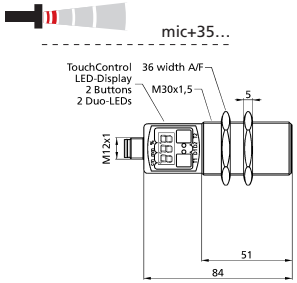

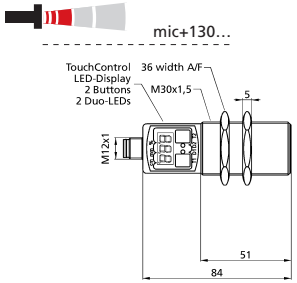

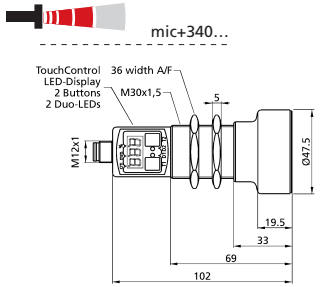

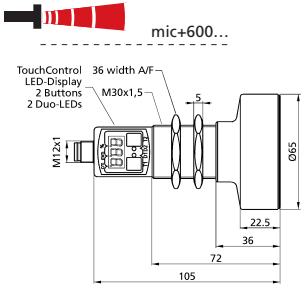

Blind zone	0 to 30 mm	0 to 60 mm	0 to 200 mm	0 to 350 mm	0 to 600 mm
Operating range	250 mm	350 mm	1.300 mm	3.400 mm	6.000 mm
Maximum range	350 mm	600 mm	2.000 mm	5.000 mm	8.000 mm
Angle of beam spread	Please see detection zone	Please see detection zone	Please see detection zone	Please see detection zone	Please see detection zone
Transducer frequency	ca. 320 kHz	ca. 400 kHz	ca. 200 kHz	ca. 120 kHz	ca. 80 kHz
Resolution, sampling rate	0,025 mm	0,025 mm	0,18 mm	0,18 mm	0,18 mm
Reproducibility	± 0,15 %	± 0,15 %	± 0,15 %	± 0,15 %	± 0,15 %
Accuracy	± 1 % (Temperature drift internal compensated, may be deactivated[1], 0,17%/K without compensation)	± 1 % (Temperature drift internal compensated, may be deactivated[1], 0,17%/K without compensation)	± 1 % (Temperature drift internal compensated, may be deactivated[1], 0,17%/K without compensation)	± 1 % (Temperature drift internal compensated, may be deactivated[1], 0,17%/K without compensation)	± 1 % (Temperature drift internal compensated, may be deactivated[1], 0,17%/K without compensation)
Detection zones for different objects: The dark grey areas are determind with a thin round bar (10 or 27 mm dia.) and indicate the typical operating range of a sensor. In order to obtain the light grey areas, a plate (500 x 500 mm) is introduced into the beam spread from the side. In doing so, the optimum angle between plate and sensor is always employed. This therefore indicates the maximum detection zone of the sensor. It is not possible to evaluate ultrasonic reflections outside this area.	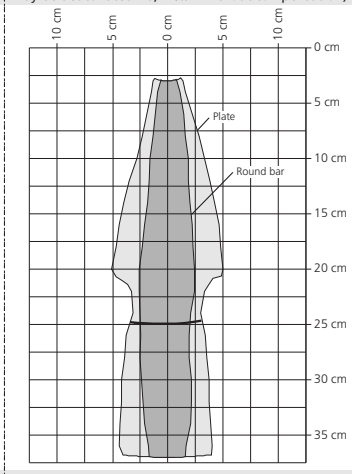	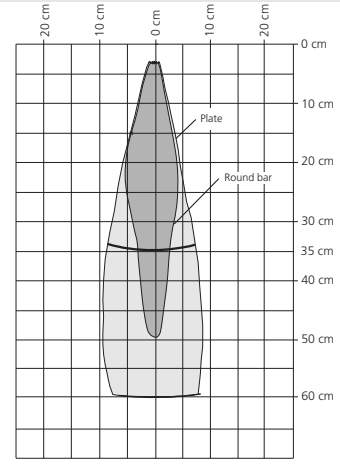	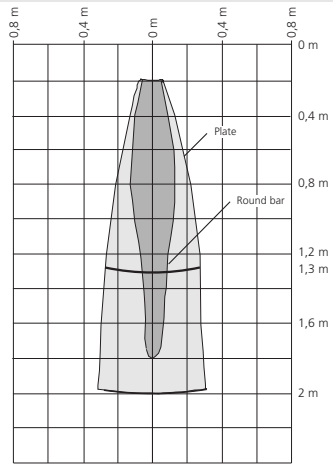	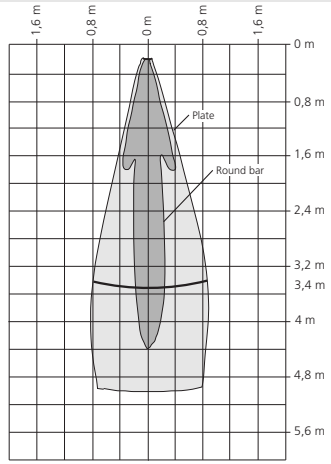	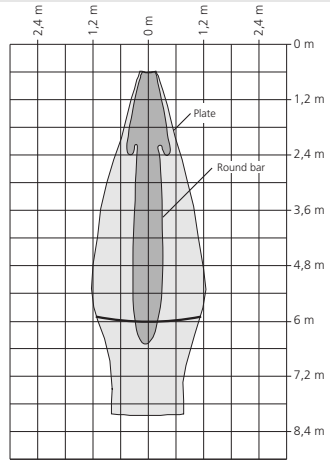
Opperating voltage U_B	9 V to 30 V DC, reverse polarity protection	9 V to 30 V DC, reverse polarity protection	9 V to 30 V DC, reverse polarity protection	9 V to 30 V DC, reverse polarity protection	9 V to 30 V DC, reverse polarity protection
Voltage ripple	±10 %	±10 %	±10 %	±10 %	±10 %
No-load supply current	≤ 80 mA	≤ 80 mA	≤ 80 mA	≤ 80 mA	≤ 80 mA
Housing	Brass sleeve, nickel-plated, plastic parts: PBT, TPU; Ultrasonic transducer: polyurethane foam, epoxy resin with glass content	Brass sleeve, nickel-plated, plastic parts: PBT, TPU; Ultrasonic transducer: polyurethane foam, epoxy resin with glass content	Brass sleeve, nickel-plated, plastic parts: PBT, TPU; Ultrasonic transducer: polyurethane foam, epoxy resin with glass content	Brass sleeve, nickel-plated, plastic parts: PBT, TPU; Ultrasonic transducer: polyurethane foam, epoxy resin with glass content	Brass sleeve, nickel-plated, plastic parts: PBT, TPU; Ultrasonic transducer: polyurethane foam, epoxy resin with glass content
Class of protection to EN 60529	IP 67	IP 67	IP 67	IP 67	IP 67
Norm conformity	EN 60947-5-2	EN 60947-5-2	EN 60947-5-2	EN 60947-5-2	EN 60947-5-2
Type of connection	5-pin initiator plug, PBT	5-pin initiator plug, PBT	5-pin initiator plug, PBT	5-pin initiator plug, PBT	5-pin initiator plug, PBT
Controls	2 push-buttons (TouchControl)	2 push-buttons (TouchControl)	2 push-buttons (TouchControl)	2 push-buttons (TouchControl)	2 push-buttons (TouchControl)
Indicators	3-digit LED-display, 2 three-colour LEDs	3-digit LED-display, 2 three-colour LEDs	3-digit LED-display, 2 three-colour LEDs	3-digit LED-display, 2 three-colour LEDs	3-digit LED-display, 2 three-colour LEDs
Programmable	Yes, with TouchControl and LinkControl	Yes, with TouchControl and LinkControl	Yes, with TouchControl and LinkControl	Yes, with TouchControl and LinkControl	Yes, with TouchControl and LinkControl
Operating temperature	-25°C to +70°C	-25°C bis +70°C	-25°C bis +70°C	-25°C bis +70°C	-25°C bis +70°C
Storage temperature	-40°C to +85°C	-40°C bis +85°C	-40°C bis +85°C	-40°C bis +85°C	-40°C bis +85°C
Weight	150 g	150 g	150 g	210 g	270 g
Switching hysteresis[1]	3 mm	5 mm	20 mm	50 mm	100 mm
switching frequency[1]	25 Hz	12 Hz	8 Hz	4 Hz	3 Hz
Response time[1]	32 ms	64 ms	92 ms	172 ms	240 ms
Time delay before availibility	< 300 ms	< 300 ms	< 300 ms	< 300 ms	< 300 ms
Order No.	**mic+25/DD/TC**	**mic+35/DD/TC**	**mic+130/DD/TC**	**mic+340/DD/TC**	**mic+600/DD/TC**
Switched output	2 x pnp, U_B - 2 V, I_{max} = 2 x 200 mA switchable NOC/NCC, short-circuit-proof	2 x pnp, U_B - 2 V, I_{max} = 2 x 200 mA	2 x pnp, U_B - 2 V, I_{max} = 2 x 200 mA switchable NOC/NCC, short-circuit-proof	2 x pnp, U_B - 2 V, I_{max} = 2 x 200 mA switchable NOC/NCC, short-circuit-proof	2 x pnp, U_B - 2 V, I_{max} = 2 x 200 mA switchable NOC/NCC, short-circuit-proof
Order No.	**mic+25/EE/TC**	**mic+35/EE/TC**	**mic+130/EE/TC**	**mic+340/EE/TC**	**mic+600/EE/TC**
Switched output	2 x npn, -U_B + 2 V, I_{max} = 2 x 200 mA switchable NOC/NCC, short-circuit-proof	2 x npn, -U_B + 2 V, I_{max} = 2 x 200 mA switchable NOC/NCC, short-circuit-proof	2 x npn, -U_B + 2 V, I_{max} = 2 x 200 mA switchable NOC/NCC, short-circuit-proof	2 x npn, -U_B + 2 V, I_{max} = 2 x 200 mA switchable NOC/NCC, short-circuit-proof	2 x npn, -U_B + 2 V, I_{max} = 2 x 200 mA switchable NOC/NCC, short-circuit-proof

1) Can be programmed with TouchControl and LinkControl

The contents of this document are subject to technical changes. Specifications are presented in a descripted way only. They do not warrant product features.

microsonic GmbH I Hauert 16 I D-44227 Dortmund I Tel: +49 (0)2 31 / 97 51 51-0 I Fax: +49 (0)2 31 / 97 51 51-51 I E-Mail: info@microsonic.de I www.microsonic.de