microsonic

# Instruction manual

## mic+ Ultrasonic Sensors with one analogue output

mic+25/IU/TC
mic+35/IU/TC
mic+130/IU/TC
mic+340/IU/TC
mic+600/IU/TC

**Product description**

- The mic+ sensor with one analogue output measures the distance to an object within the detection zone contactless. A signal proportional to distance is created according to the adjusted window margings of the analogue characteristic curve.
- The sensor automatically detects the load put to the analogue output and switches to current output or voltage output respectively.
- All settings are done with two push-buttons and a three-digit LED-display (TouchControl).
- Light emitting diodes (three-colour LEDs) indicate all operation conditions.
- Choosing between rising and falling output characteristic is possible.
- The sensors are adjustable manually using the numerical LED-display or may be trained using Teach-in processes.
- Useful additional functions are set in the Add-on-menu.
- Using the LinkControl adapter (optional accessory) all TouchControl and additional sensor parameter settings may be made by a Windows-Software.

**Important instructions for assembly and application**

All employee and plant safety-relevant measures must be taken prior to assembly, start-up, or maintenance work (see operation manual for the entire plant and the operator instruction of the plant).

**The sensors are not considered as safety equipment and may not be used to ensure human or machine safety!**

The mic+ sensors indicate a **blind zone**, in which the distance cannot be measured. The **operating range** indicates the distance of the sensor that can be applied with normal reflectors with sufficient function reserve. When using good reflectors, such as a calm water surface, the sensor can also be used up to its **maximum range**. Objects that strongly absorb (e.g. plastic foam) or diffusely reflect sound (e.g. pebble stones) can also reduce the defined operating range.

**Synchronisation**

If the assembly distances shown in Fig.1 for two or more sensors are exceeded the integrated synchronisation should be used. Connect Sync/Com-channels (pin 5 at the units receptable) of all sensors (10 maximum).

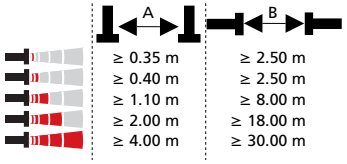


*Fig. 1: Assembly distances, indicating synchronisation/multiplex*

**Multiplex mode**

The Add-on-menu allows to assign an individual address »01« to »10« to each sensor connected via the Sync/Com-channel (Pin5). The sensors perform the ultrasonic measurement sequentially from low to high address. Therefore any influence between the sensors is rejected.

The address »00« is reserved to synchronisation mode and deactivates the multiplex mode. (To use synchronised mode all sensors must be set to address »00«.)

**Assembly instructions**

☞ Assemble the sensor at the installation location.

☞ Plug in the connector cable to the M 12 connector

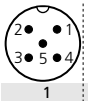

| | | colour |
|---|---|---|
| 1 | $+U_B$ | brown |
| 3 | $-U_B$ | blue |
| 4 | - | black |
| 2 | I/U | white |
| 5 | Sync/Com. | grey |

*Fig. 2: Pin assignment with view onto sensor plug and colour coding of the microsonic connection cable*

**Start-up**

mic+ sensors are delivered factory made with the following settings:

- Rising analogue characteristic
- Window margins for the analogue output set to blind zone and operating range
- Measurement range set to maximum range

Set the parameters of the sensor manually or use the Teach-in procedure to adjust the detect points.

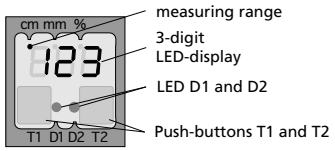


*Fig. 3: TouchControl*

**Operation**

mic+ sensors work maintenance free. Small amounts of dirt on the surface do not influence function. Thick layers of dirt and caked-on dirt affect sensor function and therefore must be removed.

**Note**

- mic+sensors have internal temperature compensation. Because the sensors heat up on their own, the temperature compensation reaches its optimum working point after approx. 30 minutes of operation.
- If an object is within the set window margins of the analogue output, then LED D1 lights up green, if the object is outside the window margins, then LED D1 lights up red.
- The load put to the analogue output is detected automatically when turning supply voltage on.
- During normal mode operation, the measured distance value is displayed on the LED-indicator in mm (up to 999 mm) or cm (from 100 cm). Scale switches automatically and is indicated by a point on top of the digits. Alternatively a percentage scale may be set in the add-on menu. In this connection 0% and 100% correspond to the set window margins of the analogue output.
- If no objects are placed within the detection zone the LED-indicator shows »- - -«.
- If no push-buttons are pressed for 20 seconds during parameter setting mode the made changes are stored and the sensor returns to normal mode operation.

**Show parameters**

Tapping push-button T1 shortly during normal mode operation shows »PAr« on the LED-display. Each time you tap push-button T1 the actual settings of the analogue output are shown.

CE 2004/108/EG

## Set sensor parameters alternatively numerically using LED-display...

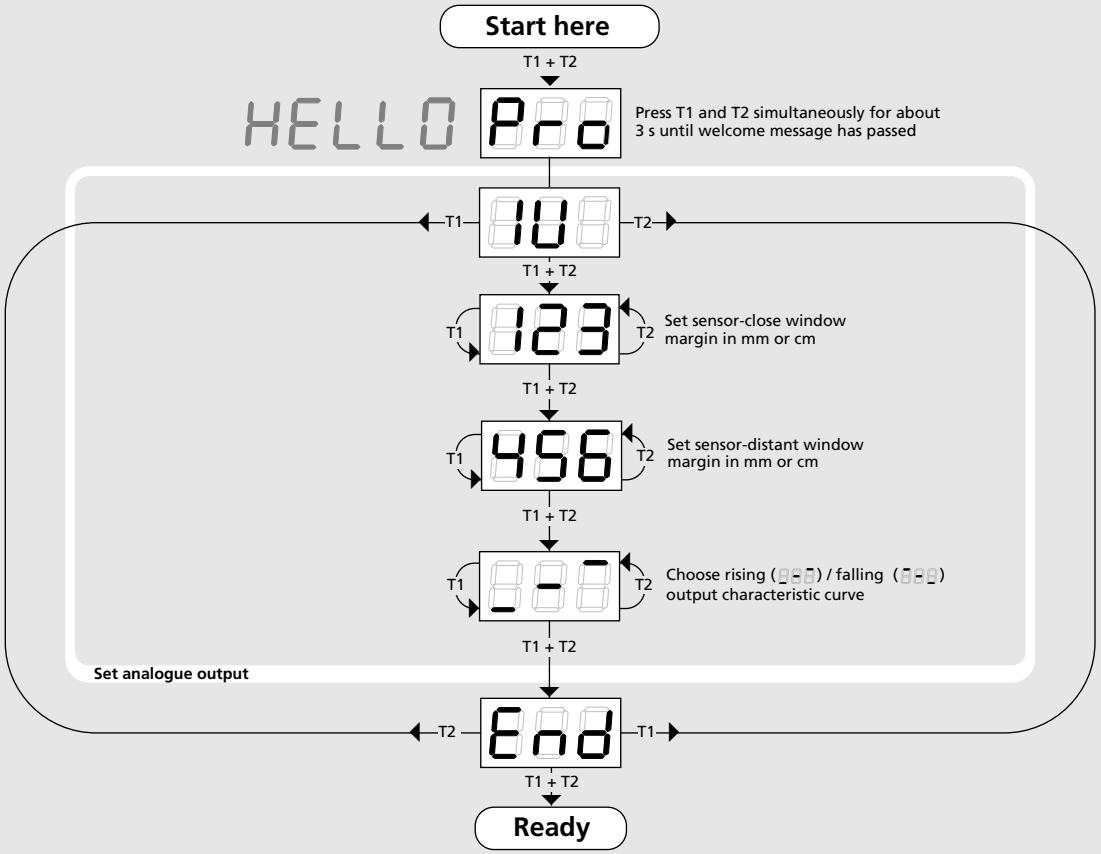

## ...or with the Teach-in procedure

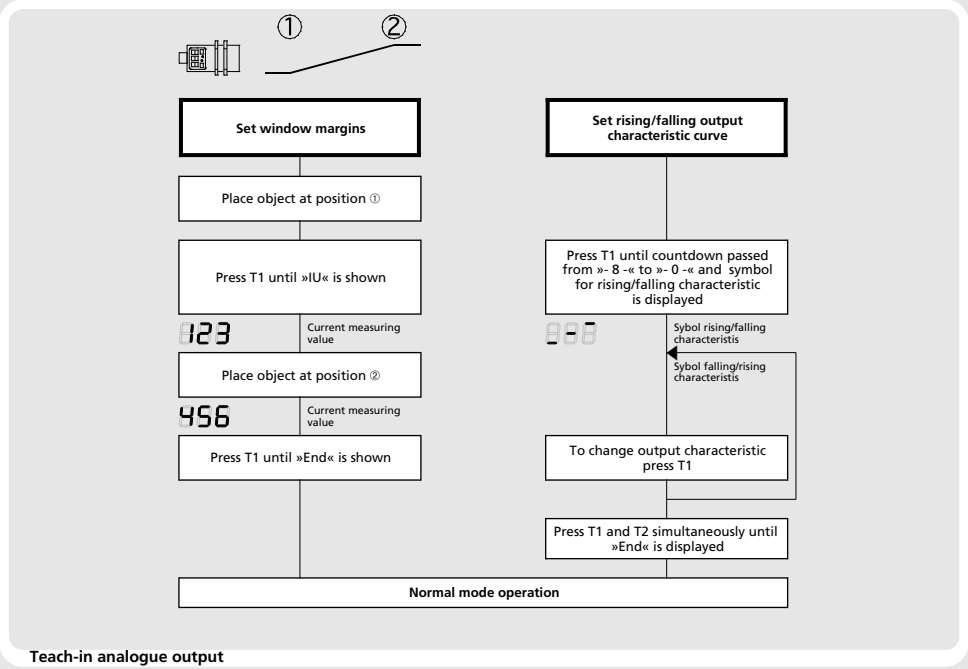


Teach-in analogue output

## Key lock and factory setting

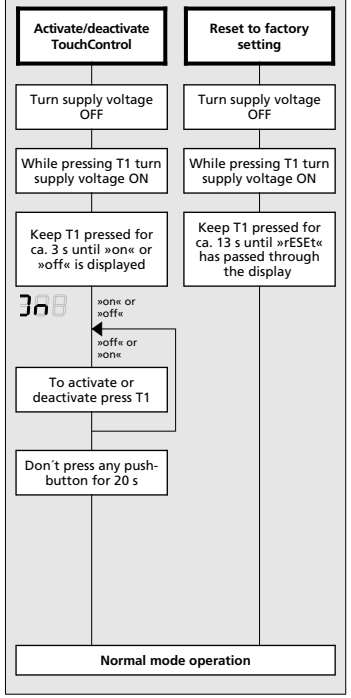


## Usefull additional functions in Add-on menu (for experienced users only, settings not required for standard applications)

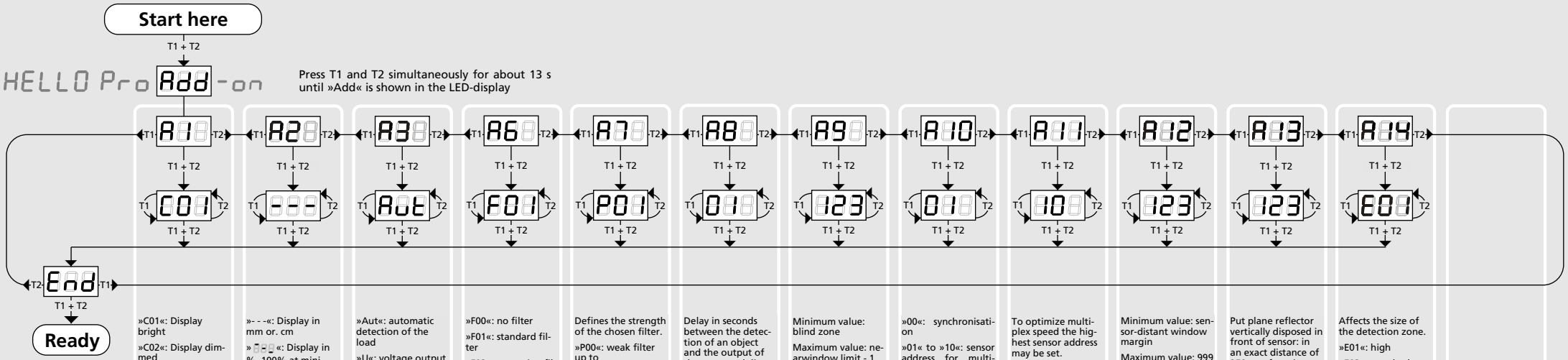


**Note**
Changes in the Add-on menu may impair the sensor function.
A6, A7, A8 , A10 , A11, A12 have influence on the response time of the sensor.

**Low power mode**
»C01«: Display bright
»C02«: Display dimmed
»C03«: Display off

**Display mode**
»- - -«: Display in mm or. cm
»8-0«: Display in %, 100% at minimum measured value
»0-8«: Display in %, 100% at maximum measured value

**Choose current/ voltage output**
»Aut«: automatic detection of the load
»U«: voltage output
»I«: current output

**Measurement filter**
»F00«: no filter
»F01«: standard filter
»F02«: averaging filter
»F03«: foreground filter
»F04«: background filter

**Filter strength**
Defines the strength of the chosen filter.
»P00«: weak filter up to
»P09«: strong filter

**Response time**
Delay in seconds between the detection of an object and the output of the measured distance in case of object approach (behaves as on-delay).
"00": 0 s (no delay) up to
"20": 20 s response time

**Foreground suppression**
Minimum value: blind zone
Maximum value: nearwindow limit - 1

**Multiplex mode device addressing**
»00«: synchronisation
»01« to »10«: sensor address for multiplex mode
»oFF«: synchronisation deactivated

**Multiplex highest device address**
To optimize multiplex speed the highest sensor address may be set.
Setting range »01« to »10«

**Measurement range**
Minimum value: sensor-distant window margin
Maximum value: 999 mm for mic+ 25/...,mic+35/..., 999 cm for mic+ 130/...,mic+340/..., mic+600/...

**Calibration display**
Put plane reflector vertically disposed in front of sensor: in an exact distance of 250 mm for mic+ 25... and mic+35... and 900 mm for all other typs.
Adjust display to 250 mm or 900 mm.
Confirm calibration with T1 + T2.

**Detection zone sensitivity**
Affects the size of the detection zone.
»E01«: high
»E02«: standard
»E03«: slight

# Technical data

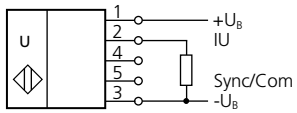


Analogue output

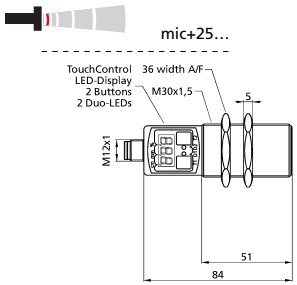


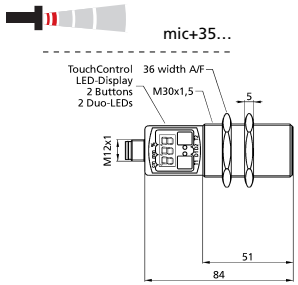


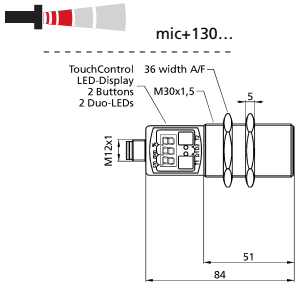


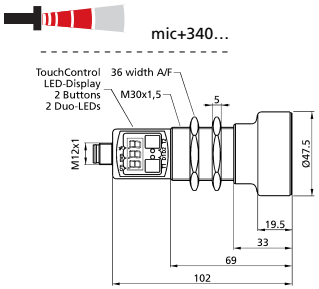


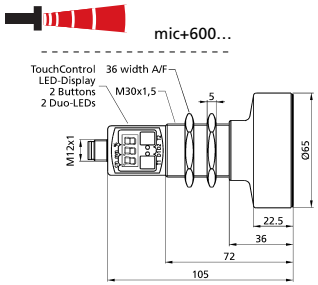


| | mic+25… | mic+35… | mic+130… | mic+340… | mic+600… |
|---|---|---|---|---|---|
| **Blind zone** | 0 to 30 mm | 0 to 65 mm | 0 to 200 mm | 0 to 350 mm | 0 to 600 mm |
| **Operating range** | 250 mm | 350 mm | 1.300 mm | 3.400 mm | 6.000 mm |
| **Maximum range** | 350 mm | 600 mm | 2.000 mm | 5.000 mm | 8.000 mm |
| **Angle of beam spread** | Please see detection zone | Please see detection zone | Please see detection zone | Please see detection zone | Please see detection zone |
| **Transducer frequency** | 320 kHz | 400 kHz | 200 kHz | 120 kHz | 80 kHz |
| **Resolution** | 0,025 mm to 0,10 mm, depending on the analogue window | 0,025 mm to 0,17 mm, depending on the analogue window | 0,18 mm to 0,57 mm, depending on the analogue window | 0,18 mm to 1,5 mm, depending on the analogue window | 0,18 mm to 2,4 mm, depending on the analogue window |
| **Detection zones** for different objects: The dark grey areas are determind with a thin round bar (10 or 27 mm dia.) and indicate the typical operating range of a sensor. In order to obtain the light grey areas, a plate (500 x 500 mm) is introduced into the beam spread from the side. In doing so, the optimum angle between plate and sensor is always employed. This therefore indicates the maximum detection zone of the sensor. It is not possible to evaluate ultrasonic reflections outside this area. | 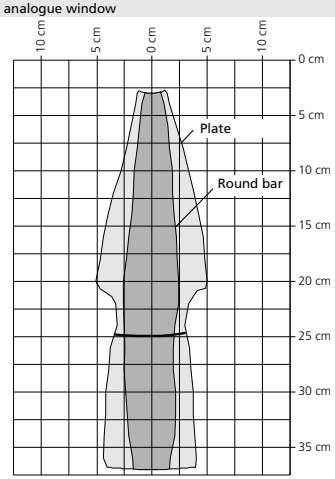  | 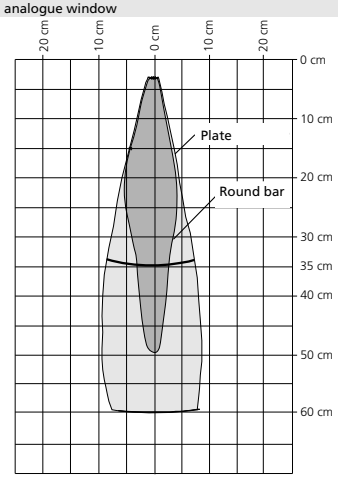  | 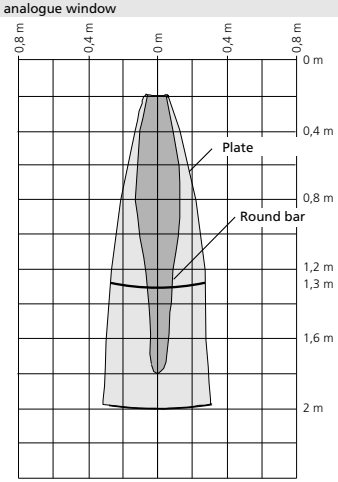  | 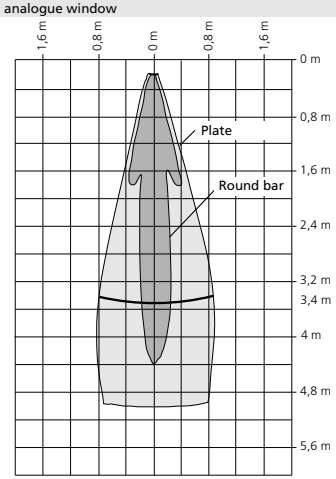  | 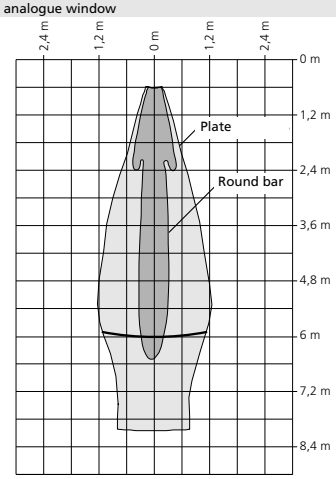  |
| **Reproducibility** | ± 0,15 % | ± 0,15 % | ± 0,15 % | ± 0,15 % | ± 0,15 % |
| **Accuracy** | ± 1 % (Temperature drift internal compensated, may be deactivated[1], 0,17%/K without compensation) | ± 1 % (Temperature drift internal compensated, may be deactivated[1], 0,17%/K without compensation) | ± 1 % (Temperature drift internal compensated, may be deactivated[1], 0,17%/K without compensation) | ± 1 % (Temperature drift internal compensated, may be deactivated[1], 0,17%/K without compensation) | ± 1 % (Temperature drift internal compensated, may be deactivated[1], 0,17%/K without compensation) |
| **Operating voltage $U_B$** | 9 V to 30 V DC, short-circuit-proof | 9 V to 30 V DC, short-circuit-proof | 9 V to 30 V DC, short-circuit-proof | 9 V to 30 V DC, short-circuit-proof | 9 V to 30 V DC, short-circuit-proof |
| **Voltage ripple** | ±10 % | ±10 % | ±10 % | ±10 % | ±10 % |
| **No-load supply current** | ≤ 80 mA | ≤ 80 mA | ≤ 80 mA | ≤ 80 mA | ≤ 80 mA |
| **Housing** | Brass sleeve, nickel-plated, plastic parts: PBT, TPU; Ultrasonic transducer: polyurethane foam, epoxy resin with glass content | Brass sleeve, nickel-plated, plastic parts: PBT, TPU; Ultrasonic transducer: polyurethane foam, epoxy resin with glass content | Brass sleeve, nickel-plated, plastic parts: PBT, TPU; Ultrasonic transducer: polyurethane foam, epoxy resin with glass content | Brass sleeve, nickel-plated, plastic parts: PBT, TPU; Ultrasonic transducer: polyurethane foam, epoxy resin with glass content | Brass sleeve, nickel-plated, plastic parts: PBT, TPU; Ultrasonic transducer: polyurethane foam, epoxy resin with glass content |
| **Class of protection to EN 60529** | IP 67 | IP 67 | IP 67 | IP 67 | IP 67 |
| **Norm conformity** | EN 60947-5-2 | EN 60947-5-2 | EN 60947-5-2 | EN 60947-5-2 | EN 60947-5-2 |
| **Type of connection** | 5-pin initiator plug, PBT | 5-pin initiator plug, PBT | 5-pin initiator plug, PBT | 5-pin initiator plug, PBT | 5-pin initiator plug, PBT |
| **Controls** | 2 push-buttons (TouchControl) | 2 push-buttons (TouchControl) | 2 push-buttons (TouchControl) | 2 push-buttons (TouchControl) | 2 push-buttons (TouchControl) |
| **Indicators** | 3-digit LED-display, 2 three-colour LEDs | 3-digit LED-display, 2 three-colour LEDs | 3-digit LED-display, 2 three-colour LEDs | 3-digit LED-display, 2 three-colour LEDs | 3-digit LED-display, 2 three-colour LEDs |
| **Programmable** | Yes, with TouchControl and LinkControl | Yes, with TouchControl and LinkControl | Yes, with TouchControl and LinkControl | Yes, with TouchControl and LinkControl | Yes, with TouchControl and LinkControl |
| **Operating temperature** | -25°C to +70°C | -25°C to +70°C | -25°C to +70°C | -25°C to +70°C | -25°C to +70°C |
| **Storage temperature** | -40°C to +85°C | -40°C to +85°C | -40°C to +85°C | -40°C to +85°C | -40°C to +85°C |
| **Weight** | 150 g | 150 g | 150 g | 210 g | 270 g |
| **Response time[1]** | 32 ms | 64 ms | 92 ms | 172 ms | 240 ms |
| **Time delay before availibility** | < 300 ms | < 300 ms | < 300 ms | < 300 ms | < 300 ms |
| **Order No.** | **mic+25/IU/TC** | **mic+35/IU/TC** | **mic+130/IU/TC** | **mic+340/IU/TC** | **mic+600/IU/TC** |
| **Current output 4 – 20 mA** | $R_L \leq 100\,\Omega$ at $9\,V \leq U_B \leq 20\,V$; $R_L \leq 500\,\Omega$ at $U_B \geq 20\,V$ Rising/falling output characteristic | $R_L \leq 100\,\Omega$ at $9\,V \leq U_B \leq 20\,V$; $R_L \leq 500\,\Omega$ at $U_B \geq 20\,V$ Rising/falling output characteristic | $R_L \leq 100\,\Omega$ at $9\,V \leq U_B \leq 20\,V$; $R_L \leq 500\,\Omega$ at $U_B \geq 20\,V$ Rising/falling output characteristic | $R_L \leq 100\,\Omega$ at $9\,V \leq U_B \leq 20\,V$; $R_L \leq 500\,\Omega$ at $U_B \geq 20\,V$ Rising/falling output characteristic | $R_L \leq 100\,\Omega$ at $9\,V \leq U_B \leq 20\,V$; $R_L \leq 500\,\Omega$ at $U_B \geq 20\,V$ Rising/falling output characteristic |
| **Voltage output 0 – 10 V** | $R_L \geq 100\,k\Omega$ at $U_B \geq 15\,V$, short-circuit-proof Rising/falling output characteristic | $R_L \geq 100\,k\Omega$ at $U_B \geq 15\,V$, short-circuit-proof Rising/falling output characteristic | $R_L \geq 100\,k\Omega$ at $U_B \geq 15\,V$, short-circuit-proof Rising/falling output characteristic | $R_L \geq 100\,k\Omega$ at $U_B \geq 15\,V$, short-circuit-proof Rising/falling output characteristic | $R_L \geq 100\,k\Omega$ at $U_B \geq 15\,V$, short-circuit-proof Rising/falling output characteristic |

1) Can be programmed with TouchControl and LinkControl



The contents of this document are subject to technical changes. Specifications are presented in a descripted way only.
They do not warrant product features.

microsonic GmbH | Hauert 16 | 44227 Dortmund | Germany | telefone: +49 (0)2 31 / 97 51 51-0 | telefax: +49 (0)2 31 / 97 51 51-51 | e-mail: info@microsonic.de | www.microsonic.de