microsonic

Operating manual

Ultrasonic proximity switch with two switched outputs

lcs+340/DD
lcs+600/DD

Product description

The lcs+ sensor offers a non-contact measurement of the distance to an object which must be positioned within the sensor's detection zone. The switched outputs are set conditional upon the adjusted detect distances.
Via the Teach-in procedure, the detect distances and operating modes can be adjusted. Two LEDs indicate operation and the state of the switched outputs.
Optionally all Teach-in and additional sensor parameter settings can be made using the LinkControl Adapter LCA-2 (optional accessory) and the LinkControl software for windows.

Safety instructions

- Read the operating instructions prior to start-up.
- Connection, installation and adjustments may only be carried out by qualified staff.
- No safety component in accordance with the EU Machine Directive.

Use for intended purpose only

lcs+ultrasonic sensors are used for non-contact detection of objects.

Installation

- Mount the sensor at the place of fitting.
- Connect a connection cable to the M12 device plug.

Start-up

- Connect the power supply.
- Carry out sensor adjustment in accordance with the diagram.

		colour
1	$+U_B$	brown
3	$-U_B$	blue
4	D2	black
2	D1	white
5	Sync/Com	grey

Fig. 1: Pin assignment with view onto sensor plug and colour coding of the microsonic connection cables

Factory setting

- Switched output on NOC.
- Detect distance at operating range and half operating range.

Synchronisation

If under multiple sensor operation the assembly distance falls below the values shown in Fig. 2, the internal synchronisation should be used. For this purpose interconnect each pin 5 of max. 10 sensors.

	≥ 2.00 m	≥ 18.00 m
	≥ 4.00 m	≥ 30.00 m

Fig. 2: Assembly distances

Maintenance

microsonic sensors are maintenance-free. In case of excess caked-on dirt we recommend cleaning the white sensor surface

Notes

- The sensors of the lcs+ family have a blind zone, within which a distance measurement is not possible.
- The lcs+ sensors are equipped with an internal temperature compensation. Due to the sensor's self heating, the temperature compensation reaches its optimum working-point after approx. 30 minutes of operation.
- During normal operation a yellow LED signals that the corresponding output has connected.
- If no push-buttons are pressed for 20 seconds during parameter setting mode the made changes are stored and the sensor returns to normal mode operation.

Sensor adjustment with Teach-in procedure

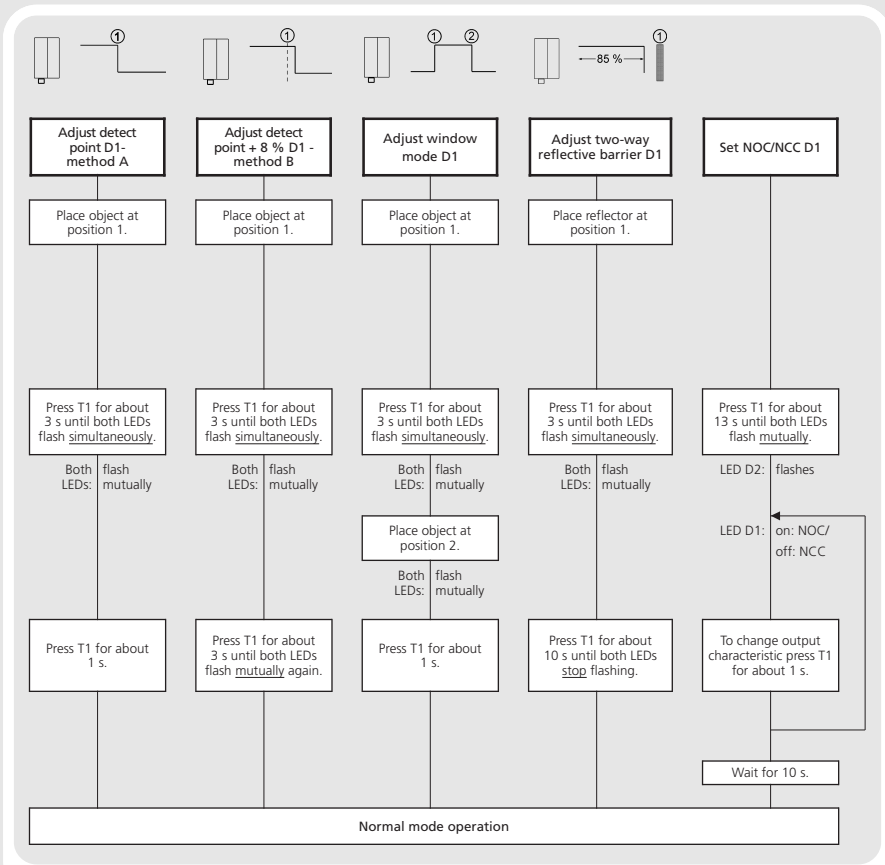

Set switched output D1

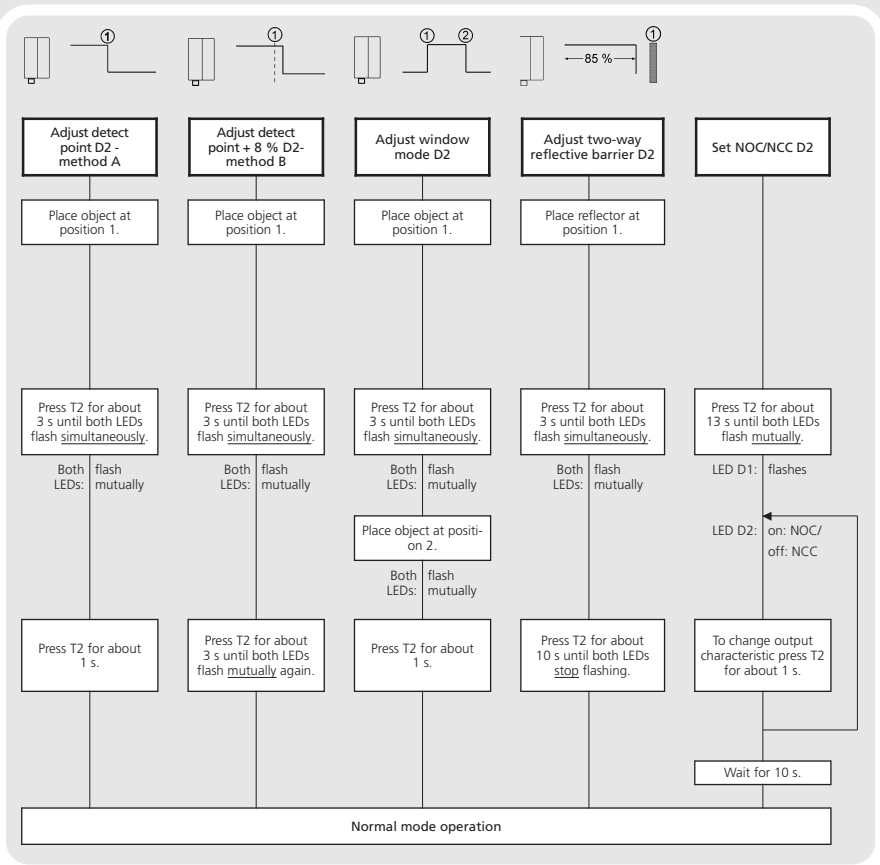

Set switched output D2

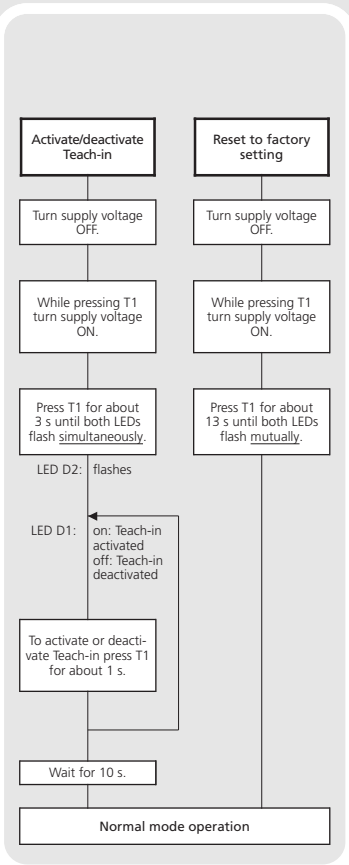

Further settings

Technical data

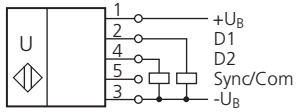

2 pnp switched outputs

	lcs+340…	lcs+600…
	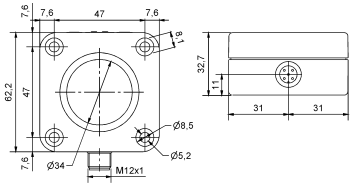	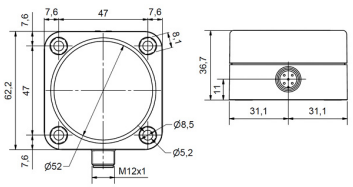
blind zone	0 to 350 mm	0 to 600 mm
operating range	3,400 mm	6,000 mm
maximum range	5,000 mm	8,000 mm
angle of beam spread	see »detection zones«	see »detection zones«
transducer frequency	ca. 120 kHz	ca. 80 kHz
resolution	0.18 mm	0.18 mm
reproducibility	± 0.15 %	± 0.15 %
detection zones for different objects: The dark grey areas represent the zone where it is easy to recognise the normal reflector (round bar). This indicates the typical operating range of the sensors. The light grey areas represent the zone where a good reflector – for instance a plate – can still be regognised. The requirement here is for an optimum alignment to the sensor. It is not possible to evaluate ultrasonic reflections outside this area.	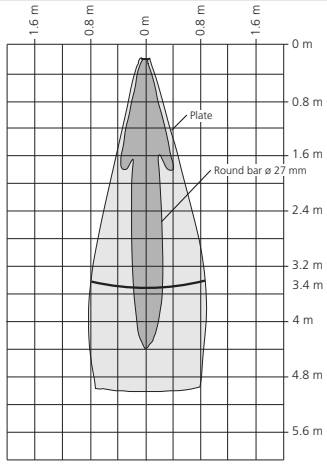	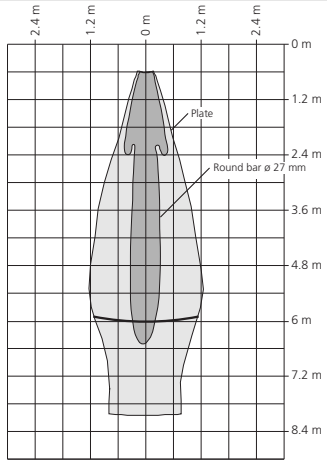
accuracy	±1 % (temperature drift internally compensated; may be deactivated, 0.17 %/K without compensation)	±1 % (temperature drift internally compensated; may be deactivated, 0.17 %/K without compensation)
operating voltage U_B	9 V to 30 V DC, Class 2 reverse polarity protection	9 V to 30 V DC, Class 2 reverse polarity protection
voltage ripple	±10 %	±10 %
no-load current consumption	≤ 60 mA	≤ 60 mA
housing	PBT, Polyester; ultrasonic transducer: polyurethane foam, epoxy resin with glass content	PBT, Polyester; ultrasonic transducer: polyurethane foam, epoxy resin with glass content
class of protection per EN 60 529	IP 67	IP 67
type of connection	5-pin M12 circular plug, PBT	5-pin M12 circular plug,. PBT
controls	2 push-buttons	2 push-buttons
programmable	• Teach-in via push-buttons • LCA-2 with LinkControl	• Teach-in via push-buttons • LCA-2 with LinkControl
indicators	2 LEDs yellow/green (switched output set/not set)	2 LEDs yellow/green (switched output set/not set)
synchronisation	internal synchronisation up to 10 sensors	internal synchronisation up to 10 sensors
operating temperature	-25°C to +70°C	-25°C to +70°C
storage temperature	-40°C to +85°C	-40°C to +85°C
weight	180 g	240 g
switching hysteresis 1)	50 mm	100 mm
switching frequency 1)	4 Hz	3 Hz
response time 1)	172 ms	240 ms
time delay before availability 1)	< 380 ms	< 450 ms
norm conformity	EN 60947-5-2	EN 60947-5-2
order no.	lcs+340/DD	lcs+600/DD
switched output	2 x pnp, U_B-2 V, I_{max} = 2 x 200 mA NOC/NCC adjustable, short-circuit-proof	2 x pnp, U_B-2 V, I_{max} = 2 x 200 mA NOC/NCC adjustable, short-circuit-proof

1) Can be programmed with LinkControl

- In the »Two-way reflective barrier« operating mode, the object has to be within the range of 0-85 % of the set distance.
- In the Teach-in procedure »Set detect point – method A« the actual distance to the object is taught to the sensor as the detect point. If the object moves towards the sensor (e.g. with level control) then the taught distance is the level at which the sensor has to switch the output.
- If the object to be scanned moves into the detection area from the side, the Teach-in procedure »Set detect point +8 % – method B« should be used. In this way the switching distance is set 8 % further than the actual measured distance to the object. This ensures a reliable switching distance even if the height of the objects varies slightly.

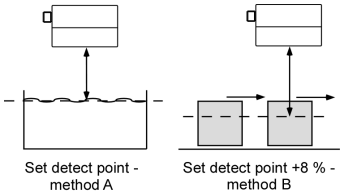

Fig. 3: Setting the detect point for different directions of movement of the object

- The sensor can be reset to its factory setting (see »Sensor adjustment with Teach-in procedure«).
- Optionally all Teach-in and additional sensor parameter settings can be made using the LinkControl adapter (optional accessory) and the LinkControl software for windows.

2004/108/EC

Enclosure Type 1
For use only in industrial machinery NFPA 79 applications.