microsonic



extract from our online catalogue:

BF-pms/A1

current to: 2026-11-18

microsonic GmbH / Phoenixseestraße 7 / 44263 Dortmund / Germany / **T** +49 231 975151-0 / **F** +49 231 975151-51 / **E** info@microsonic.de
microsonic® ist eine eingetragene Marke der microsonic GmbH. Alle Rechte vorbehalten. Änderungen vorbehalten.

BF-pms/A1

scale drawing

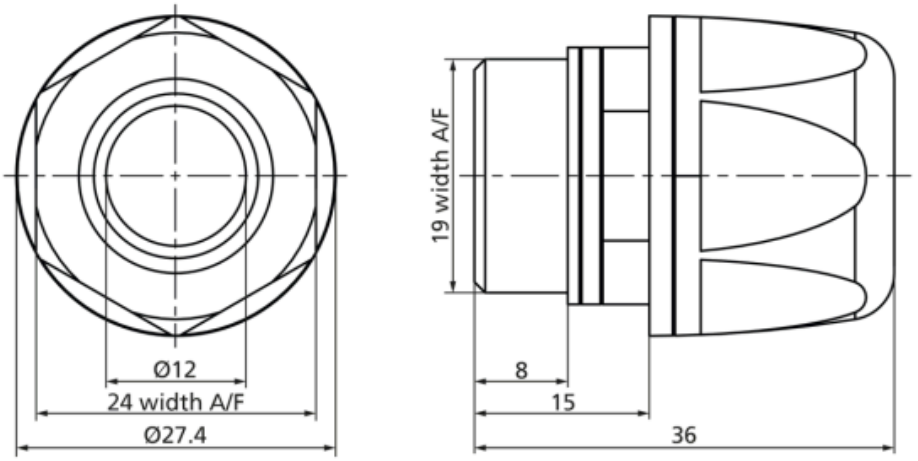

operating mode	accessories
particularities	High chemical resistance Stainless steel construction Hygienic Design ECOLAB EHEDG (TYPE EL Class I AUX)

Housing

material	stainless steel plastic parts: FKM, PA
class of protection to EN 60529	IP 69
operating temperature	-20°C to +100°C

Accessories

deployable accessory	pms-100/CF/A1 pms-100/CI/A1 pms-100/CU/A1 pms-15/CF/A1 pms-15/CI/A1 pms-15/CU/A1 pms-25/CF/A1 pms-25/CI/A1 pms-25/CU/A1 pms-35/CF/A1
deployable accessory	Hygienic screw connection in stainless steel with smooth surfaces for pms sensors with D12 adapter shaft.