microsonic



extract from our online catalogue:

KST4A-2/M8

current to: 2026-11-19

microsonic GmbH / Phoenixseestraße 7 / 44263 Dortmund / Germany / **T** +49 231 975151-0 / **F** +49 231 975151-51 / **E** info@microsonic.de
microsonic® ist eine eingetragene Marke der microsonic GmbH. Alle Rechte vorbehalten. Änderungen vorbehalten.

KST4A-2/M8

scale drawing

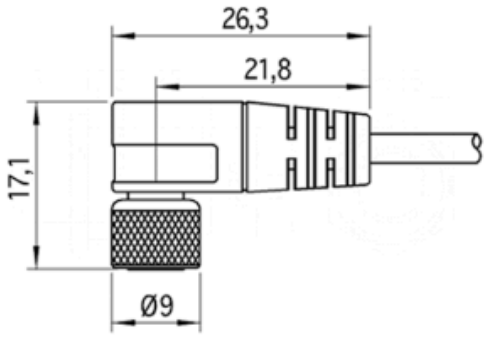

operating mode	accessories

Housing

class of protection to EN 60529	IP 67
weight	70 g

Accessories

deployable accessory	cable, 4 contacts, female angled connector M8, cable length 2 m

pin assignment

View on cable box

KST3.../M8 KST4.../M8

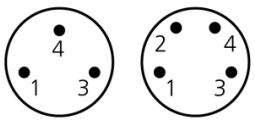

- Pole 1: brown
- Pole 2: white
- Pole 3: blue
- Pole 4: black