microsonic



extract from our online catalogue:

SoundPipe sks1

current to: 2026-11-26

microsonic GmbH / Phoenixseestraße 7 / 44263 Dortmund / Germany / **T** +49 231 975151-0 / **F** +49 231 975151-51 / **E** info@microsonic.de
microsonic® ist eine eingetragene Marke der microsonic GmbH. Alle Rechte vorbehalten. Änderungen vorbehalten.

SoundPipe sks1

scale drawing

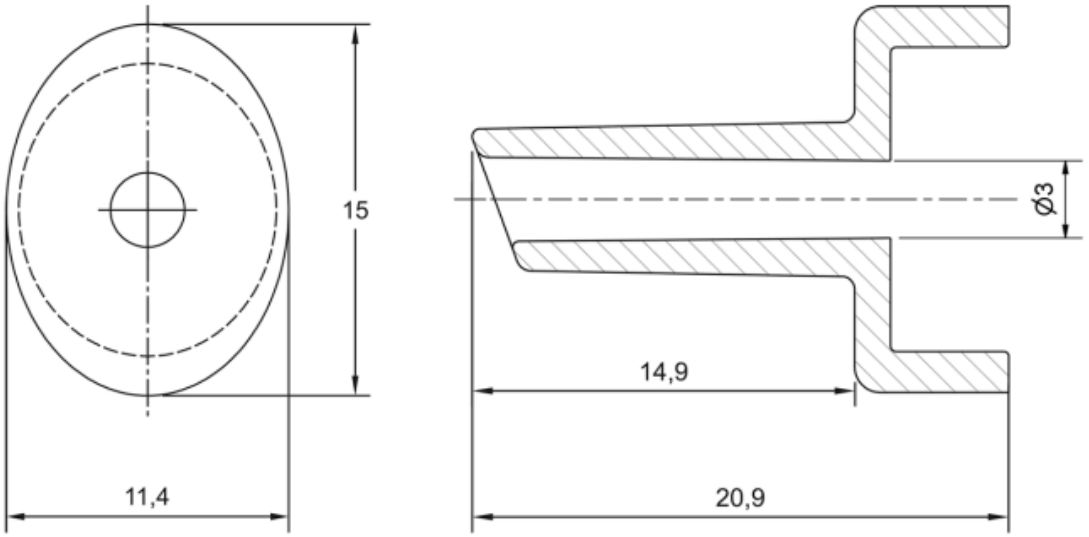

operating mode	accessories

Housing

material	PES
weight	1 g

Accessories

deployable accessory	SoundPipe for sks ultrasonic sensors. SoundPipe sks1 intensively bundles the sound field and allows measurements in drill holes and openings with small diameters. Push the SoundPipe down on the transducer until it is flush with the sensor housing. Avoid axial tensile force on the SoundPipe, otherwise the SoundPipe may dismantle from the sks sensor.