microsonic



extract from our online catalogue:

SyncBox1

current to: 2026-11-18

microsonic GmbH / Phoenixseestraße 7 / 44263 Dortmund / Germany / **T** +49 231 975151-0 / **F** +49 231 975151-51 / **E** info@microsonic.de
microsonic® ist eine eingetragene Marke der microsonic GmbH. Alle Rechte vorbehalten. Änderungen vorbehalten.

SyncBox1

scale drawing

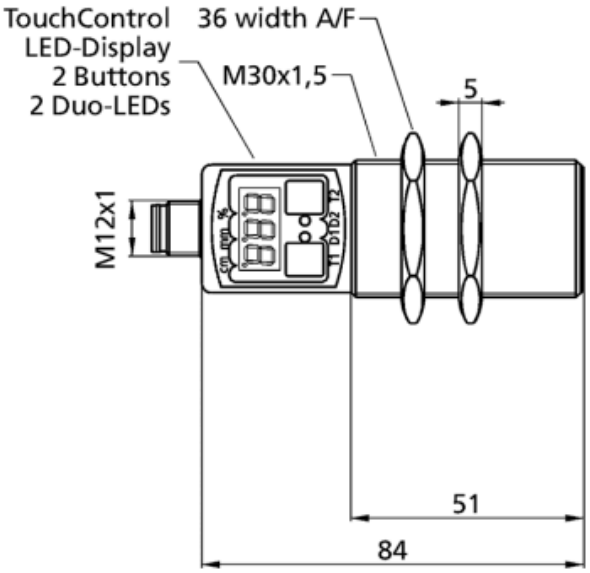

design	cylindrical M30
operating mode	accessories

Electrical Data

operating voltage U_B	9 - 30 V d.c., reverse polarity protection
voltage ripple	± 10 %
no-load current consumption	≤ 25 mA
type of connection	5-pin M12 initiator plug

Outputs

output 1	synchronisation output npn: I_{max} = 200 mA (-U_B+2V)
Ausgang 2	synchronisation output npn: I_{max} = 200 mA (-U_B+2V)

Inputs

input 1	control input

Housing

material	brass sleeve, nickel-plated, plastic parts, PBT
class of protection to EN 60529	IP 67
operating temperature	-20°C to +70°C
storage temperature	-40°C to +85°C
weight	110 g

Technical Features/Characteristics

controls	2 push-buttons + LED display (TouchControl)
scope for settings	TouchControl
indicators	3-digit LED display, 2 x three-colour LED

Accessories

deployable accessory	KST4A-2/M12 KST4A-5/M12 KST4G-10/M12 KST4G-2/M12 KST4G-30/M12 KST4G-5/M12 KST5A-2/M12 KST5A-5/M12 KST5G-10/M12 KST5G-2/M12
deployable accessory	For the external synchronization of more than 10 mic+, mic, crm+, cube and lcs+ sensors. The SyncBox1 allows synchronization of up to 160 sensors.