microsonic



extract from our online catalogue:

bks+3/FIU

current to: 2026-11-20

microsonic GmbH / Phoenixseestraße 7 / 44263 Dortmund / Germany / **T** +49 231 975151-0 / **F** +49 231 975151-51 / **E** info@microsonic.de
microsonic® ist eine eingetragene Marke der microsonic GmbH. Alle Rechte vorbehalten. Änderungen vorbehalten.

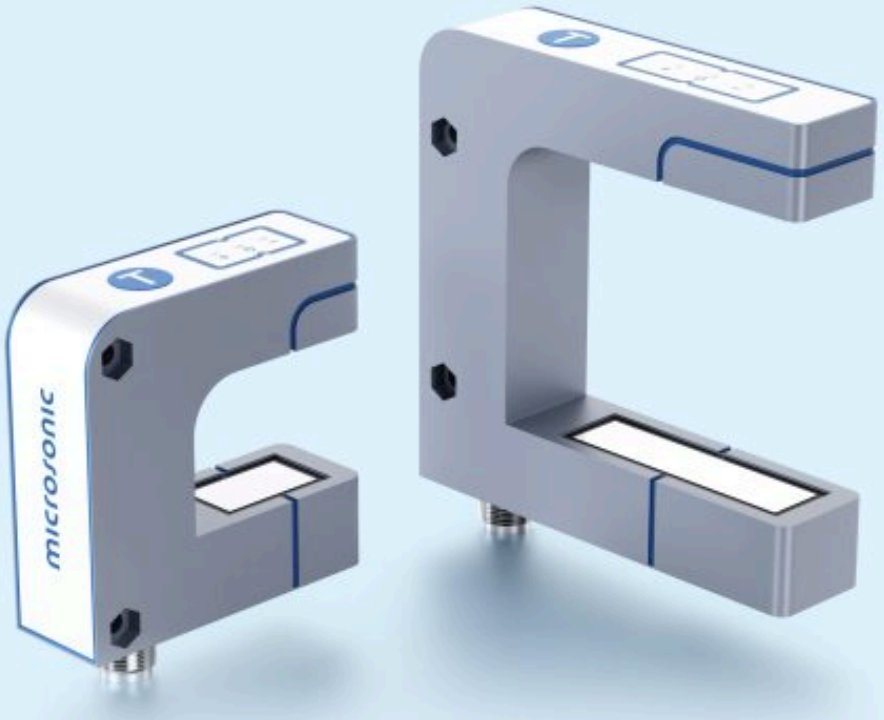

bks+

The bks+ edge sensor facilitates the contact-free web edge scanning of foils, paper and other soundimpermeable materials.

Highlights

- 2 housing designs › with 30 and 60 mm fork width
- Available in 12 mm or 40 mm measurement range
- IO-Link interface › for support of the new industry standard
- Smart Sensor Profile › more transparency between IO-Link Devices
- 0.003 mm to 0.01 mm resolution
- Very compact housing dimensions
- UL Listed › to Canadian and US safety standards

Basics

- Contact-free detection of the path edge › for regulation of the web path
- Analogue output 4–20 mA and 0–10 V › switchable between current and voltage output
- 3 LEDs and 1 button on the top of the housing
- Parameterisable with LinkControl
- Robust metal housing

The bks+ ultrasonic web edge sensor

is a fork sensor for scanning the edges of sound-impermeable materials such as foil or paper. This is why the bks+ is ideally suited for the web control of high-transparency foils, light-sensitive materials, materials with greatly varying transparency and paper subject to high paper dust loads.

The working range for the bks+3/FIU/A is 12 mm and for the bks+6/FIU/A is 40 mm.

The functional principle

Both transducer and receiver are placed in a single, slim fork housing. The transducer in the lower leg is emits short, cyclical sound pulses. These are detected by the ultrasonic receiver in the upper leg of the fork. A material embedded in the fork covers the sound gap and thereby dampens the receiving signal in depending on the coverage. This is analysed by internal electronics.

An analogue signal is output depending of coverage, resp. data word via IO-Link.

The bks+ sensors are equipped with:



1 Push-Pull switching output with pnp or npn switching technology and 1 analogue output 4–20 mA and 0–10 V.

Using the Teach-in button

on the upper side of the edge sensor sets the zero point for the local edge. This calibration can be done in two ways:

- clear the fork completey of any web material,
- push the button for approx. 3 seconds
- cover the fork sensor completely and push the button briefly(< 1 s). Ready. Or
- adjust the path edge within the fork to both markings so that 50 % of the sound gap is covered,
- then push the button for approx. 6 seconds. Ready.



With a fork width of only 30 mm and 60 mm respectively and a depth of 33 mm and 73 mm respectively, it has a very compact design. Its working range of 12 mm and 40 mm respectively and its high accuracy of 0.1 mm permit a wide variety of applications.

The edge sensor bks+3 has a fork width of 30 mm and a fork depth of 43 mm. The bks+6 web edge sensor has a fork width of 60 mm and a fork depth of 73 mm. Other fork widths and depths are available upon request. The housing side is equipped with two consistent bores for the edge sensor's mounting. The electrical connection is established via an M12 circular plug.

Three LEDs

show the position of the web material within the fork. When using light-sensitive materials, the LEDs can be switched off.

Switching over

between current and voltage outputs is done by using the button or LinkControl. The bks+ is preset and can be used immediately. Optionally, it can also be comprehensively parameterised using LinkControl adapter LCA-2.

Updated to IO-Link version 1.1.3

The bks+ sensors with the extension "/A" in the order name now support IO-Link 1.1.3 and the Smart Sensor Profile.

The predecessor models bks+3/FIU and bks+6/FIU can be found in the sensor archive.

You have special requirements?

Nothing as simple as that.

With us, you can easily find an individual solution. Let us talk about your application: +49 231 97 51 51-82.

Archivsensor

bks+3/FIU

scale drawing

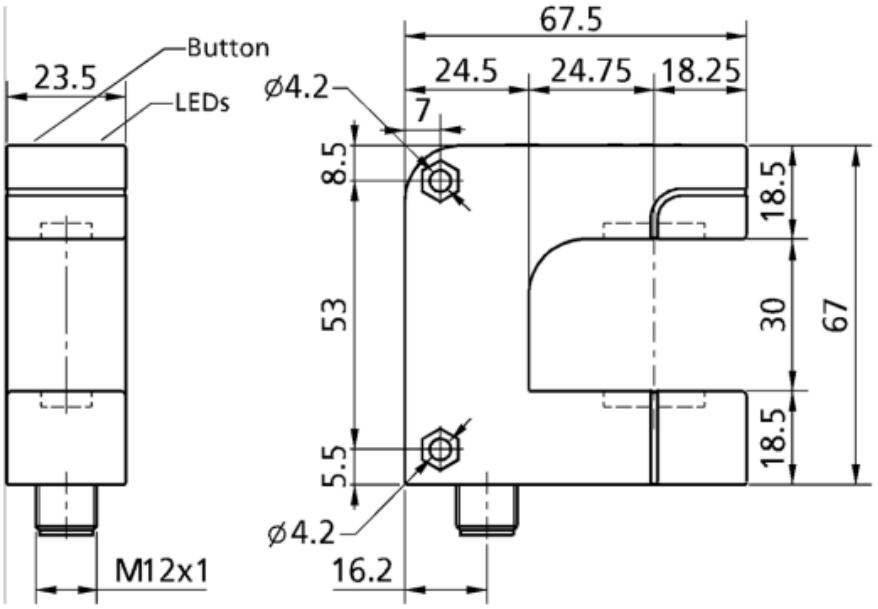

Successor model available	bks+3/FIU/A

1 x Push-Pull + 1 x analogue 4-20 mA / 0-10 V

design	fork-like
operating mode	IO-Link web edge control
working range	≥ 12 mm (±6 mm)
particularities	IO-Link UL Listed

Ultrasonic-Specific

means of measurement	pulse operation with amplitude evaluation
transducer frequency	170 kHz
resolution	0,01 mm
reproducibility	± 0.1 mm at constant ambient conditions

Electrical Data

operating voltage U_B	20 - 30 V d.c., reverse polarity protection
voltage ripple	± 10 %
no-load current consumption	≤ 60 mA
type of connection	5-pin M12 initiator plug

Outputs

output 1	analogue output current: 4-20 mA / voltage: 0-10 V, short-circuit-proof switchable rising/falling
Ausgang 2	switching output Push-Pull, U_B-3 V, -U_B+3 V,I_{max} = 100 mA
response delay	5,1 ms
delay prior to availability	< 300 ms

Inputs

input 1	com input synchronisation input teach-in input

Housing

material	zinc die-casting, plastic parts, PBT
ultrasonic transducer	polyurethane foam, epoxy resin with glass contents
class of protection to EN 60529	IP 65
operating temperature	+5°C to +60°C
storage temperature	-40°C to +85°C
weight	190 g
further versions	larger fork width/depth

Technical Features/Characteristics

controls	1 push-button
scope for settings	Teach-in via push-button LCA-2 with LinkControl IO-Link

Accessories

deployable accessory	KST5A-2/M12 KST5A-5/M12 KST5G-2/M12 KST5G-5/M12 LCA-2 LCA-2 Koffer

pin assignment

