microsonic



extract from our online catalogue:

dbk+5/Empf/3BEE/M18

current to: 2026-11-20

microsonic GmbH / Phoenixseestraße 7 / 44263 Dortmund / Germany / **T** +49 231 975151-0 / **F** +49 231 975151-51 / **E** info@microsonic.de
microsonic® ist eine eingetragene Marke der microsonic GmbH. Alle Rechte vorbehalten. Änderungen vorbehalten.



dbk+5 ultrasonic double sheet control

The dbk+5 extends the area of application of double sheet controls to heavy carton, corrugated cardboard, and plastic sheets.

Highlights

- High-performance ultrasonic double-sheet control › especially for the probing of corrugated cardboard as well as plastic
- 3 control inputs › for Teach-in, trigger, and external sensitivity settings for the material
- Teach-in option › e.g. for probing plates stuck together with an oil film
- Compact design in M18 × 1 threaded tube

Basics

- Reliable detection of single and double sheets
- No Teach-in needed (plug and play)
- Double-sheet and missing-sheet output
- Working distance between the transmitter and the receiver selectable from 30 to 70 mm
- Trigger option › for applications in warehouse flow
- LinkControl › for configuration of sensors from a PC

The dbk+5 ultrasonic double-sheet control

is designed for scanning thin sheet metal, plastic sheets and corrugated cardboard with thicknesses exceeding the working range of the dbk+4 sensors. The principle behind the operation is the same as for the dbk+4 sensors. The main difference between the systems lies in the materials to the detected. (For further information, see dbk+4.)

Typical materials

in the range of applications of the dbk+5 are sheet metal up to approx. 2 mm thick (depending on the type of metal), plastic sheets and boards for printed circuits up to a thickness of several millimetres, and coarse corrugated card.

Papers require the sensors to be mounted perpendicular to the passing sheets. But in the case of sheet metal, plastic sheets and boards for printed circuits, it is preferable to mount the dbk+5 at an angle of 10–18° to the passing sheets. The optimum angle should be determined by way of trials. Corrugated cards should be scanned at an angle of 35–45° to the corrugations.

Transmitter and receiver

are housed in M18 × 1 mm threaded sleeves which should be mounted from 30 to 70 mm apart.

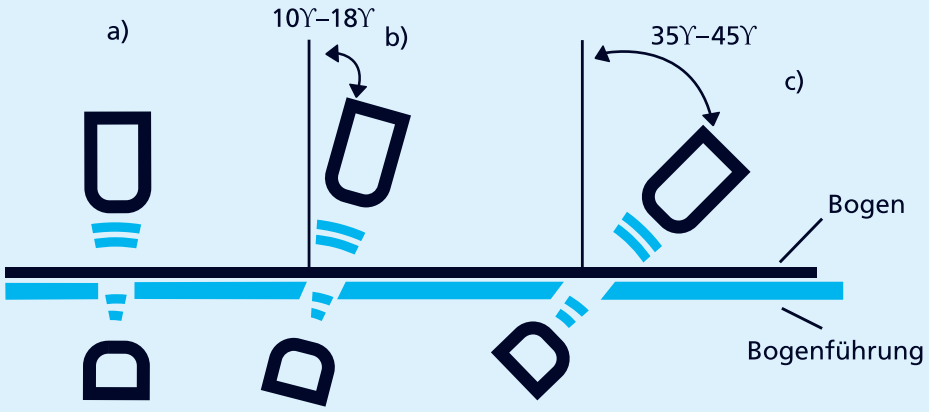

You have special requirements?

Nothing as simple as that.

With us, you can easily find an individual solution. Let us talk about your application: +49 231 97 51 51-82.

dbk+5/Empf/3BEE/M18

scale drawing

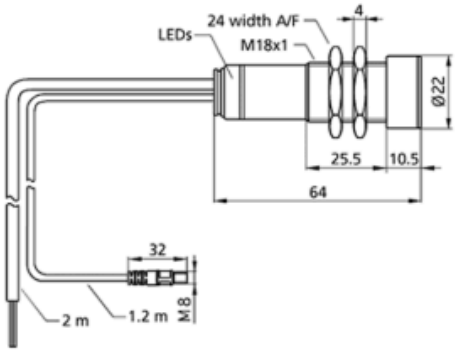

2 x pnp

design	cylindrical M18
operating mode	double sheet control
working range	papers with weights of 100 - 2,000 g/m^2, plastic sheets and films up to 5 mm thick*, self-adhesive films, sheet metals up to 2 mm thick*, corrugated card, wafers, PCBs (*: material-dependent)
particularities	receiver for ultrasonic double sheet control distance between transmitter and receiver can be selected cable connection

Ultrasonic-Specific

means of measurement	pulse operation with amplitude evaluation
transducer frequency	200 kHz
blind zone	7 mm in front of transmitter and receiver

Electrical Data

operating voltage U_B	20 - 30 V d.c., reverse polarity protection
voltage ripple	± 10 %
no-load current consumption	≤ 50 mA
type of connection	2 m PUR cable, 7 × 0.14 mm^2

Outputs

output 1	double sheet output npn: I_{max} = 200 mA (-U_B+2V) NOC/NCC adjustable, short-circuit-proof
Ausgang 2	missing sheet output npn: I_{max} = 200 mA (-U_B+2V) NOC/NCC adjustable, short-circuit-proof
response delay	< 500 µs im Trigger-Mode, 5,5 ms im Free-Run-Mode
delay prior to availability	< 750 ms

Inputs

input 1	control input
Eingang 2	control input
Eingang 3	control input

Housing

material	brass sleeve, nickel-plated, plastic parts, PBT, PA
ultrasonic transducer	polyurethane foam, epoxy resin with glass contents
class of protection to EN 60529	IP 65
operating temperature	+5°C to +60°C
storage temperature	-40°C to +85°C

Technical Features/Characteristics

controls	control input
scope for settings	Teach-in LCA-2 with LinkCopy or LinkControl software
indicators	1 x Duo-LED; green: working / red: double sheet / flashing red: missing sheet

Accessories

deployable accessory	dbk-Testbogen BF-18 LCA-2 LCA-2 Koffer

pin assignment

