microsonic



extract from our online catalogue:

dbk-4/Empf/CDD/O/M18

current to: 2026-11-19

microsonic GmbH / Phoenixseestraße 7 / 44263 Dortmund / Germany / **T** +49 231 975151-0 / **F** +49 231 975151-51 / **E** info@microsonic.de
microsonic® ist eine eingetragene Marke der microsonic GmbH. Alle Rechte vorbehalten. Änderungen vorbehalten.

Archivsensor

dbk-4/Empf/CDD/O/M18

scale drawing

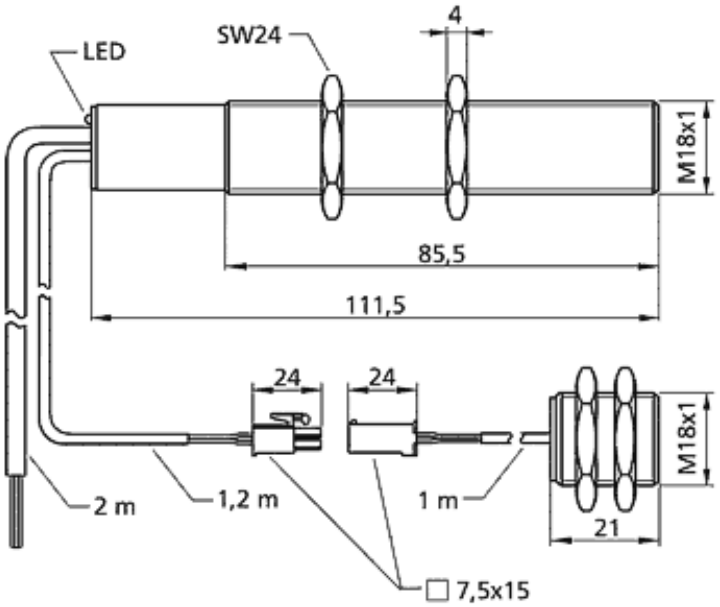

Successor model available	dbk+4/Empf/3CDD/M18
2 x pnp	
design	cylindrical M18
operating mode	double sheet control
working range	papers with weights of 20 - 1,200 g/m^2, metal-laminated sheets and films up to 0.4 mm thick, self-adhesive films, sheet metals up to 0.3 mm thick, fine corrugated card
particularities	receiver for ultrasonic double sheet control

Ultrasonic-Specific

means of measurement	pulse operation with amplitude evaluation
transducer frequency	400 kHz
blind zone	7 mm in front of transmitter and receiver

Electrical Data

operating voltage U_B	20 - 30 V d.c., reverse polarity protection
voltage ripple	± 10 %
no-load current consumption	≤ 45 mA
type of connection	2 m PVC cable, 5 × 0.25 mm^2

Outputs

output 1	double sheet output pnp: I_{max} = 500 mA (U_B-2V) NCC, short-circuit-proof
Ausgang 2	missing sheet output pnp: I_{max} = 500 mA (U_B-2V) NCC, short-circuit-proof
response delay	2.5 ms or 6.5 ms in free-run mode

Inputs

input 1	control input

Housing

material	brass sleeve, nickel-plated, plastic parts, PBT
ultrasonic transducer	polyurethane foam, epoxy resin with glass contents
class of protection to EN 60529	IP 65
operating temperature	+5°C to +60°C
storage temperature	-40°C to +85°C
weight	130 g
further versions	dbk-4/Empf/CDD/O /QP dbk-4/Empf/CDD/O/M18 /K3K1
further versions	cuboidal receiver different cable length

Technical Features/Characteristics

controls	not necessary
scope for settings	not necessary
indicators	1 x Duo-LED; green: working / red: double sheet / flashing red: missing sheet

Accessories

deployable accessory	BF-18 dbk-Testbogen

pin assignment

