microsonic



extract from our online catalogue:

dbk-4/Sender/M18

current to: 2026-11-19

microsonic GmbH / Phoenixseestraße 7 / 44263 Dortmund / Germany / **T** +49 231 975151-0 / **F** +49 231 975151-51 / **E** info@microsonic.de
microsonic® ist eine eingetragene Marke der microsonic GmbH. Alle Rechte vorbehalten. Änderungen vorbehalten.

Archivsensor

dbk-4/Sender/M18

scale drawing

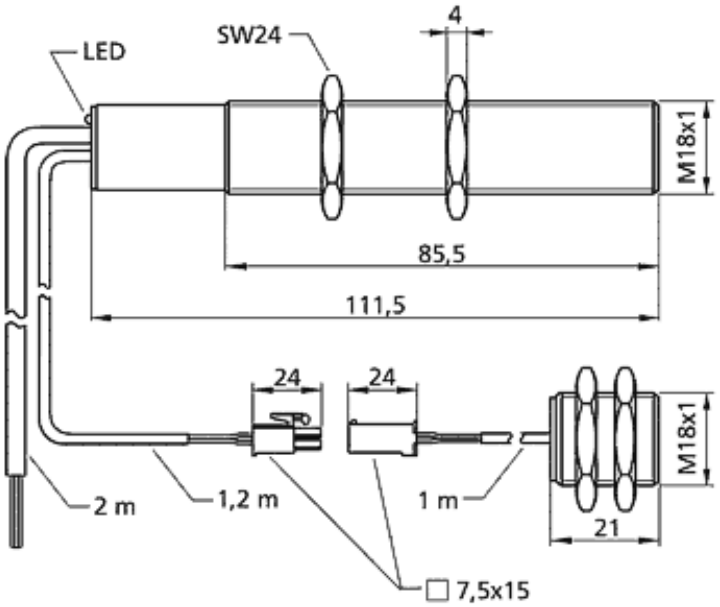

Successor model available	dbk-4/Sender/M18/K1
design	cylindrical M18
operating mode	double sheet control
working range	papers with weights of 20 - 1,200 g/m^2, metal-laminated sheets and films up to 0.4 mm thick, self-adhesive films, sheet metals up to 0.3 mm thick, fine corrugated card
particularities	archive sensor transmitter for ultrasonic double sheet control

Ultrasonic-Specific

means of measurement	pulse operation with amplitude evaluation
transducer frequency	400 kHz
blind zone	7 mm in front of transmitter and receiver

Housing

material	brass sleeve, nickel-plated, plastic parts, PBT
ultrasonic transducer	polyurethane foam, epoxy resin with glass contents
class of protection to EN 60529	IP 65
operating temperature	+5°C to +60°C
storage temperature	-40°C to +85°C
weight	30 g

Technical Features/Characteristics

controls	not necessary
scope for settings	not necessary

Accessories

deployable accessory	dbk-Testbogen BF-18