microsonic



extract from our online catalogue:

dbk-5/CEE/O/M30 E+S

current to: 2026-11-19

microsonic GmbH / Phoenixseestraße 7 / 44263 Dortmund / Germany / **T** +49 231 975151-0 / **F** +49 231 975151-51 / **E** info@microsonic.de
microsonic® ist eine eingetragene Marke der microsonic GmbH. Alle Rechte vorbehalten. Änderungen vorbehalten.

Archivsensor

dbk-5/CEE/O/M30 E+S

scale drawing

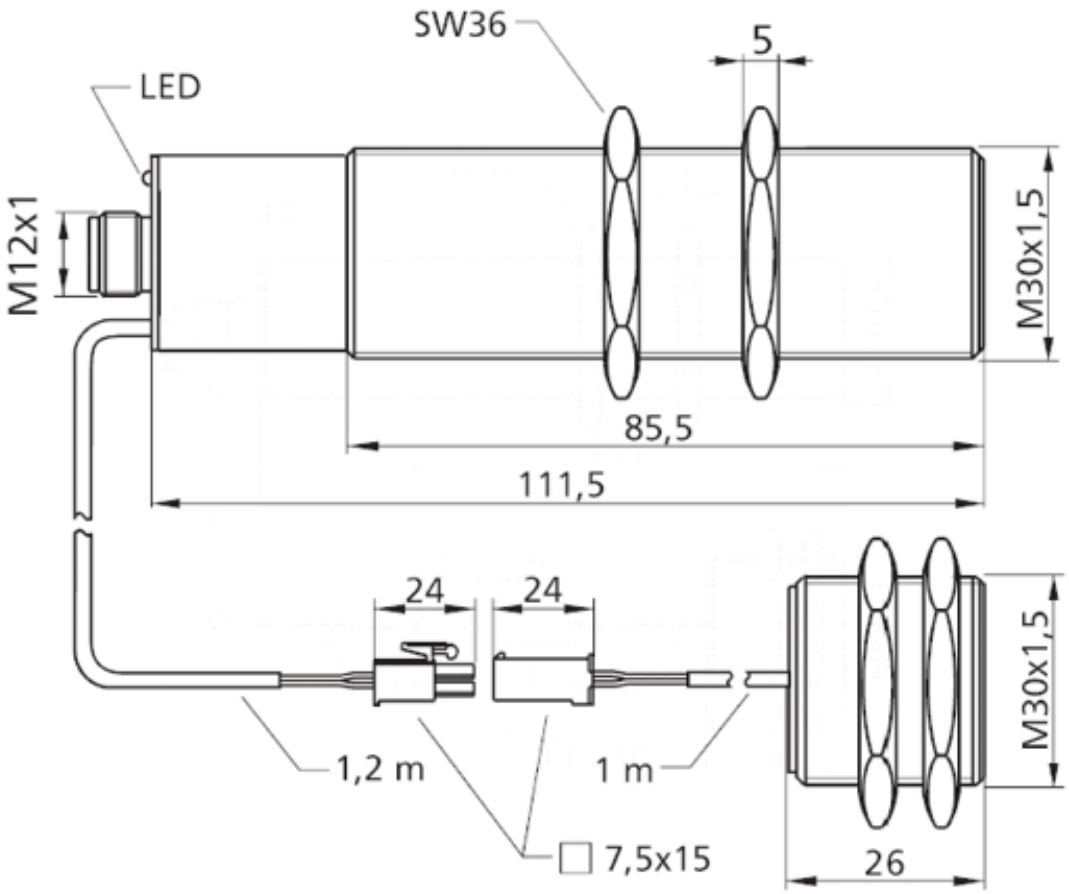

Successor model available	dbk+5/3BEE/M18 E+S

2 x npn

design	cylindrical M30
operating mode	double sheet control
working range	papers with weights of 120 g/m^2, metal-laminated sheets, corrugated card, sheet metals up to 2 mm thick, PCB boards

Ultrasonic-Specific

means of measurement	pulse operation with amplitude evaluation
transducer frequency	200 kHz
blind zone	7 mm in front of transmitter and receiver

Electrical Data

operating voltage U_B	20 - 30 V d.c., reverse polarity protection
voltage ripple	± 10 %
no-load current consumption	≤ 45 mA
type of connection	5-pin M12 initiator plug

Outputs

output 1	double sheet output npn: I_{max} = 500 mA (-U_B+2V) NCC, short-circuit-proof
Ausgang 2	double sheet output npn: I_{max} = 500 mA (-U_B+2V) NCC, short-circuit-proof
response delay	5.5 ms or. 15.5 ms in free-run mode

Inputs

input 1	control input

Housing

material	brass sleeve, nickel-plated, plastic parts, PBT
ultrasonic transducer	polyurethane foam, epoxy resin with glass contents
class of protection to EN 60529	IP 65
operating temperature	+5°C to +60°C
storage temperature	-40°C to +85°C
weight	250 g
further versions	dbk-5/Sender/M30/K1 dbk-5/Empf/CEE/O/M30
further versions	single transmitter/receiver

Technical Features/Characteristics

controls	not necessary
scope for settings	not necessary
indicators	1 x Duo-LED; green: working / red: double sheet / flashing red: missing sheet

Accessories

deployable accessory	KST5A-2/M12 KST5A-5/M12 KST5G-2/M12 KST5G-5/M12