microsonic



extract from our online catalogue:

# *dbk-5/Empf/CEE/O/M30*

current to: 2026-11-19

microsonic GmbH / Phoenixseestraße 7 / 44263 Dortmund / Germany / **T** +49 231 975151-0 / **F** +49 231 975151-51 / **E** info@microsonic.de
microsonic® ist eine eingetragene Marke der microsonic GmbH. Alle Rechte vorbehalten. Änderungen vorbehalten.

**Archivsensor**

# dbk-5/Empf/CEE/O/M30

## scale drawing

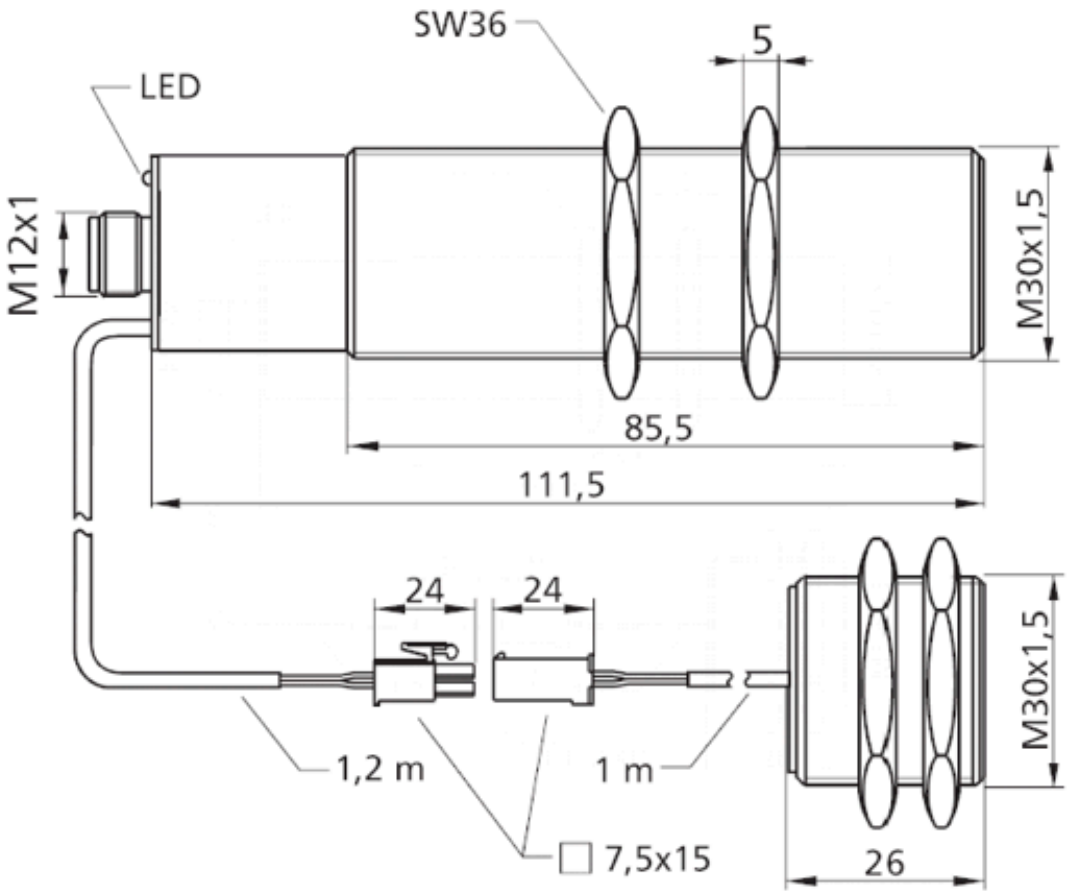


| Successor model available | dbk+5/Empf/3BEE/M18 |
|---|---|
| 2 x npn | |
| design | cylindrical M30 |
| operating mode | double sheet control |
| working range | papers with weights of 120 g/m$^2$, metal-laminated sheets, corrugated card, sheet metals up to 2 mm thick, PCB boards |
| particularities | receiver for ultrasonic double sheet control |

## Ultrasonic-Specific

| | |
|---|---|
| means of measurement | pulse operation with amplitude evaluation |
| transducer frequency | 200 kHz |
| blind zone | 7 mm in front of transmitter and receiver |

## Electrical Data

| | |
|---|---|
| operating voltage $U_B$ | 20 - 30 V d.c., reverse polarity protection |
| voltage ripple | ± 10 % |
| no-load current consumption | ≤ 45 mA |
| type of connection | 5-pin M12 initiator plug |

## Outputs

| | |
|---|---|
| output 1 | double sheet output<br>npn: $I_{max}$ = 500 mA (-$U_B$+2V)<br>NCC, short-circuit-proof |
| Ausgang 2 | missing sheet output<br>npn: $I_{max}$ = 500 mA (-$U_B$+2V)<br>NCC, short-circuit-proof |
| response delay | 5.5 ms or. 15.5 ms in free-run mode |

## Inputs

| | |
|---|---|
| input 1 | control input |

## Housing

| | |
|---|---|
| material | brass sleeve, nickel-plated, plastic parts, PBT |
| ultrasonic transducer | polyurethane foam, epoxy resin with glass contents |
| class of protection to EN 60529 | IP 65 |
| operating temperature | +5°C to +60°C |
| storage temperature | -40°C to +85°C |
| weight | |

## Technical Features/Characteristics

| | |
|---|---|
| controls | not necessary |
| scope for settings | not necessary |
| indicators | 1 x Duo-LED; green: working / red: double sheet / flashing red: missing sheet |

## Accessories

| | |
|---|---|
| deployable accessory | KST5A-2/M12<br>KST5A-5/M12<br>KST5G-2/M12<br>KST5G-5/M12 |