microsonic



extract from our online catalogue:

esp-4/Empf/3CDD/M18

current to: 2026-11-20

microsonic GmbH / Phoenixseestraße 7 / 44263 Dortmund / Germany / **T** +49 231 975151-0 / **F** +49 231 975151-51 / **E** info@microsonic.de
microsonic® ist eine eingetragene Marke der microsonic GmbH. Alle Rechte vorbehalten. Änderungen vorbehalten.



esp-4

Label and splice sensor compact in a single unit, optionally with M12 sensor heads.

Highlights

- 3 Teach-in methods › to be able to configure the sensor individually for any task
- Response time < 300 µs › for use at high web and label speeds
- QuickTeach › simplified Teach-in process
- Splice detection even for thick band materials
- Variants with very compact transmitters and receivers in the M12 threaded sleeve

Basics

- Label and splice sensor in a single unit
- 2 switching outputs › for label/splice detection and web break monitoring
- LinkControl › as optional assistance for installation and commissioning

Label and splice sensor in one appliance

With a rapid pulse sequence, an ultrasonic transmitter beams upwards against the backing material. The effect of the sound pulses inducing the backing material to vibrate is for a markedly weakened sonic wave to be emitted on the opposite side.

The receiver receives this sonic wave and analyses it. The backing material signal level is different to that of the label or splice. And this difference in signal is analysed by the esp-4. The difference between backing material and a label or between sheeting and splice can be very slight indeed. In order to differentiate, the esp-4 sensor has to learn the signal level for the backing material or sheeting.

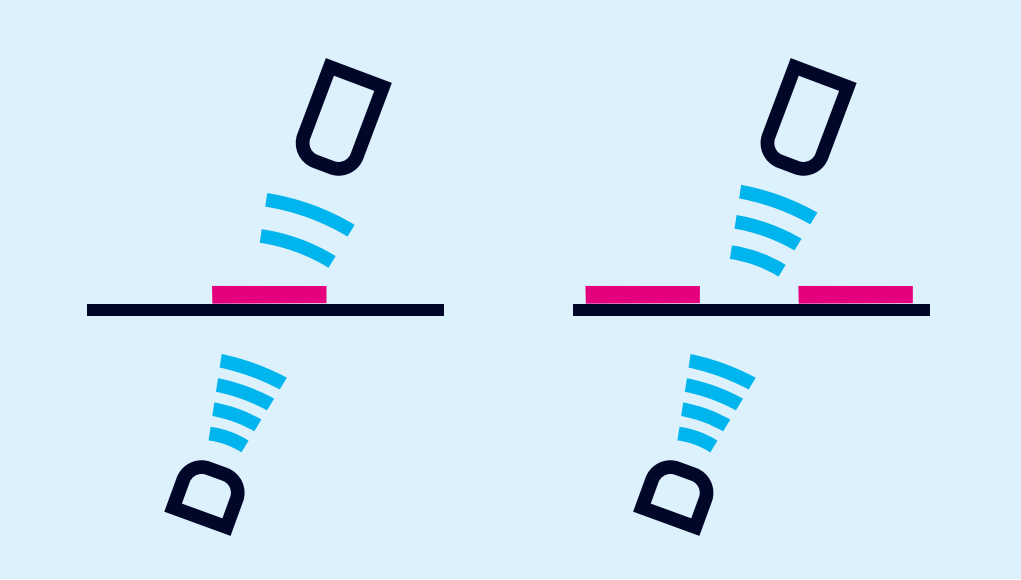

Backing material with label provides an attenuated signal level

The esp-4 sensors can be used as a label and splice sensor. The 3 Teach-in methods and QuickTeach allow the esp-4 sensor to be optimally set for each and every assignment.

A) Dynamic Teach-in of backing material and label

During Teach-in, the backing material with the labels is led at a constant speed through the esp-4 sensor. The esp-4 sensor automatically learns signal levels for the labels and for the gaps between them.

This Teach-in method is also suitable for Teach-in of a tear-open string on a cellophane film. Here, during Teach-in, the tear-open string on the cellophane film is moved a number of times through the sensor. This enables the esp-4 to gauge the changing between cellophane film and tear-open string.

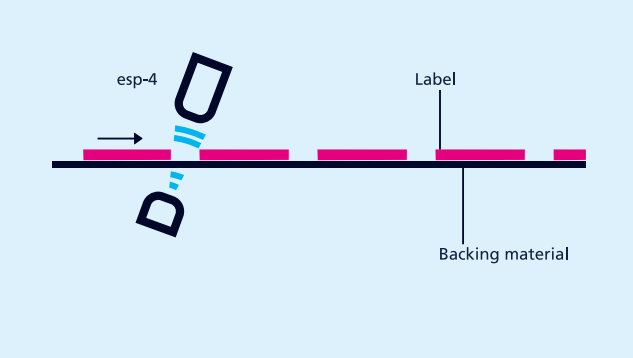

esp-4 as a label sensor

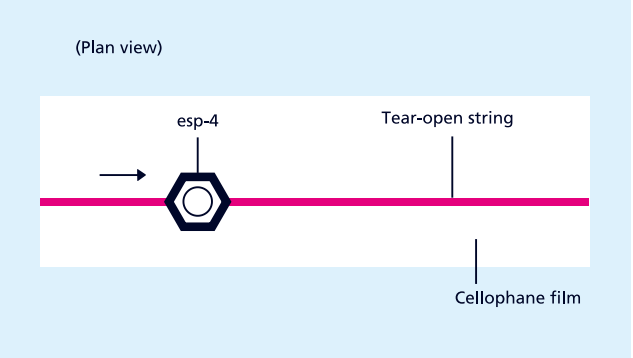

esp-4 as a thread sensor

B) Separate Teach-in for backing material and labels

The signal level difference for the backing material and labels might be very slight. In order to still scan labels with very little difference in signals, Teach-in for the signal levels is done separately: Teach-in is first done for the backing material and then for the label on it. The switching threshold then lies between these two signal levels.

C) Teach-in only for sheeting

Sheeting is usually processed from the roll. Then the splice to be detected for setting the esp-4 is somewhere inaccessible in this roll. A separate Teach-in method is available here in which the Teach-in only applies to the sheeting. The esp-4 detects the splice from this difference in sound level and sets its output.

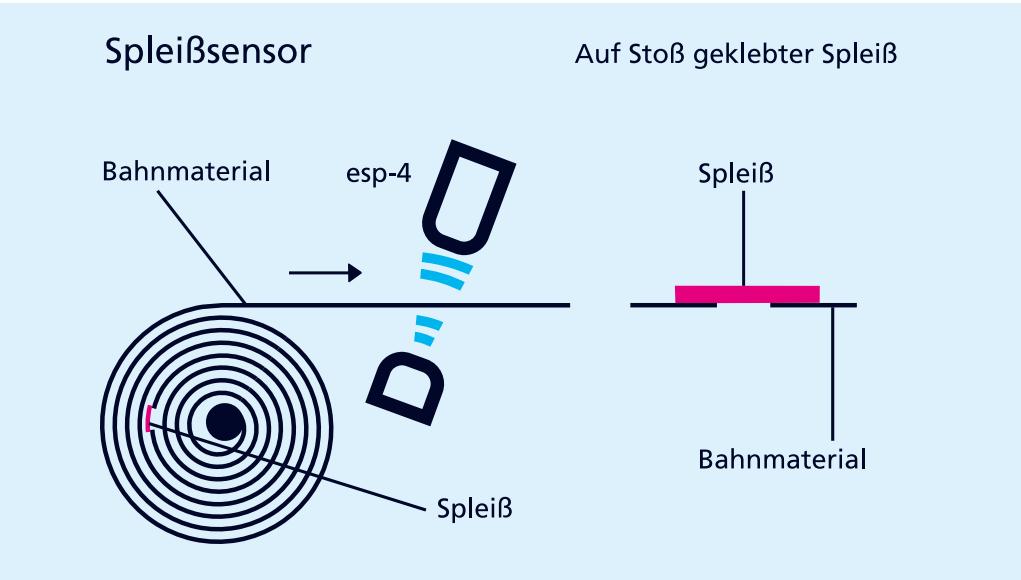

esp-4 as a splice sensor

QuickTeach

The esp-4 learns the material as long as signal level is applied to C1.

With LinkControl

the esp-4 can optionally be parameterised. Measured values can also be shown grafically.

Two housing designs with different ultrasonic frequencies

The esp-4/3CDD/M18 E+S and esp-4/3BEE/M18 as a receiving transducer integrated directly into the evaluation electronics is typically used for the detection of splices in thick sheetings.

The esp-4/M12/3CDD/M18 E+S has an external receiving transducer. The transmitter and receiver are each housed in M12 threaded sleeves. The variant with M12 sensor heads is preferred for the detection of labels.

You have special requirements?

Nothing as simple as that.

With us, you can easily find an individual solution. Let us talk about your application: +49 231 97 51 51-82.

esp-4/Empf/3CDD/M18

scale drawing

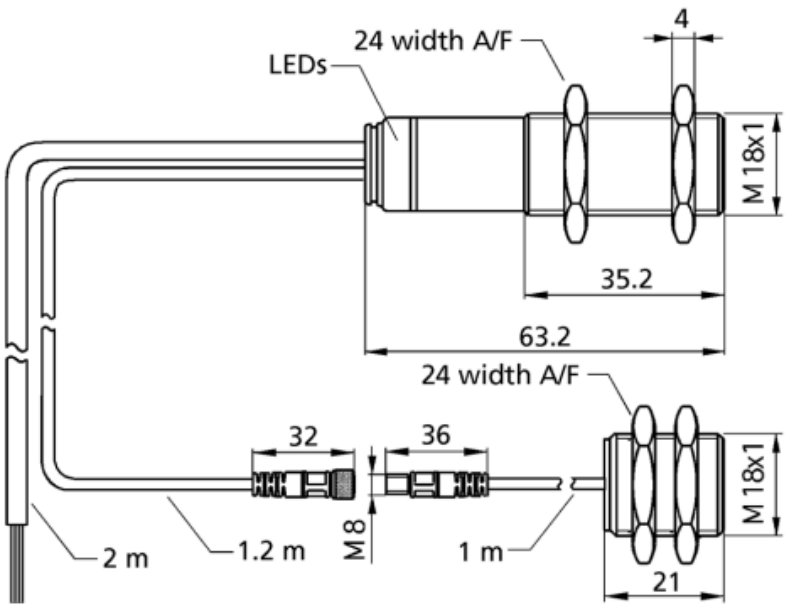

2 x pnp

design	cylindrical M18
operating mode	label/splice detection
working range	sheeting with weights of < 20 g/m^2 up to >> 600 g/m^2, metal-laminated sheets and films up to 0.6 mm thick, self-adhesive films, labels on backing material
particularities	receiver for ultrasonic label/splice sensor

Ultrasonic-Specific

means of measurement	pulse operation with amplitude evaluation
transducer frequency	400 kHz
blind zone	7 mm in front of transmitter and receiver

Electrical Data

voltage ripple	± 10 %
no-load current consumption	≤ 50 mA
type of connection	2 m PUR cable, 7 × 0.14 mm^2

Outputs

output 1	switching output label/splice detected pnp: I_{max} = 200 mA (U_B-2V) NOC/NCC adjustable, short-circuit-proof
Ausgang 2	switching output web break pnp: I_{max} = 200 mA (U_B-2V) NOC/NCC adjustable, short-circuit-proof
response delay	< 300 µs

Inputs

input 1	control input
Eingang 2	control input
Eingang 3	control input

Housing

material	brass sleeve, nickel-plated, plastic parts, PBT, PA
ultrasonic transducer	polyurethane foam, epoxy resin with glass contents
class of protection to EN 60529	IP 65
operating temperature	+5°C to +60°C
storage temperature	-40°C to +85°C
weight	100 g

Technical Features/Characteristics

controls	control input
scope for settings	Teach-in via control inputs LCA-2 with LinkControl
indicators	1 x Duo-LED; green: working / red: label/splice detected / flashing red: web break

pin assignment

