microsonic



extract from our online catalogue:

Ics-25/IU/HV/QP R1

current to: 2026-11-20

microsonic GmbH / Phoenixseestraße 7 / 44263 Dortmund / Germany / **T** +49 231 975151-0 / **F** +49 231 975151-51 / **E** info@microsonic.de
microsonic® ist eine eingetragene Marke der microsonic GmbH. Alle Rechte vorbehalten. Änderungen vorbehalten.



Ics

Ultrasonic sensors in the Ics series are available in three device variants with three different detection ranges.

Highlights

Basics

- Up to 3 pnp switching outputs
- Automatic synchronisation › for simultaneous operation of up to ten sensors in close quarters
- 2 or 3 switching outputs in pnp variant
- Analogue output 4–20 mA and 0–10 V › with automatic switching between current and voltage outputs
- 3 detection ranges with a measurement range of 30 mm to 2 m
- microsonic Teach-in on pin 5
- 0.18 mm resolution
- Temperature compensation
- 9–30 V operating voltage
- LinkControl › for configuration of sensors from a PC

The Ics sensors

have a block-like plastic housing with four fixation bores, two of which are already equipped with M4 threaded bushings for eased mounting.

Two or three LEDs

indicate all operating statuses.

Three detection ranges and two output stages are available for selection:

- 2 pnp switching outputs
- 3 pnp switching outputs
- 1 analogue output 4–20 mA and 0–10 V

Via pin 5 at the M12 circular connector

(Com input), the Ics sensors are set (Teach-in): Switching output D1 is set by connecting pin 5 to +UB, while switching output D2 is set by connecting pin 5 to –UB. Also the sensors with analogue output are set via pin 5.

The Ics sensors with switching output offer three operating modes:

- Single switching point
- Two-way reflective barrier
- Window mode

Teach-in of a single switching point

- Place object to be detected (1) at the desired distance
- Apply +U_B to pin 5 for about 3 seconds
- Then apply +U_B to pin 5 again for about 1 seconds

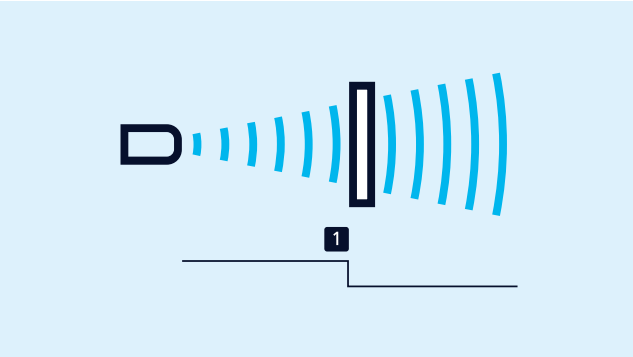

Teach-in of a switching point

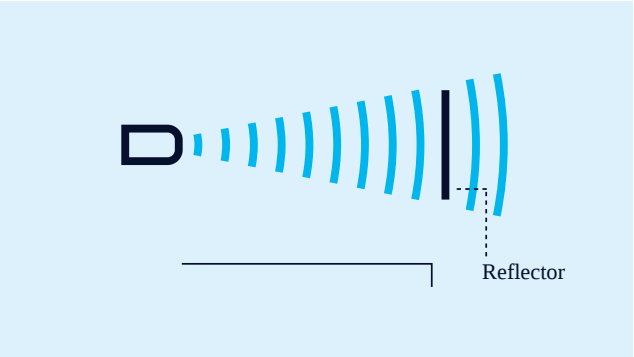

Teach-in of a two-way reflective barrier

Teach-in of a two-way reflective barrier

with a fixed reflector

- Apply +U_B to pin 5 for about 3 seconds
- Then apply +U_B to pin 5 again for about 10 seconds

For configuration of a window

- Place object at the near edge of the window (1)
- Apply +U_B to pin 5 for about 3 seconds
- Then move the object to the far edge of the window (2)
- Then apply +U_B to pin 5 again for about 1 seconds

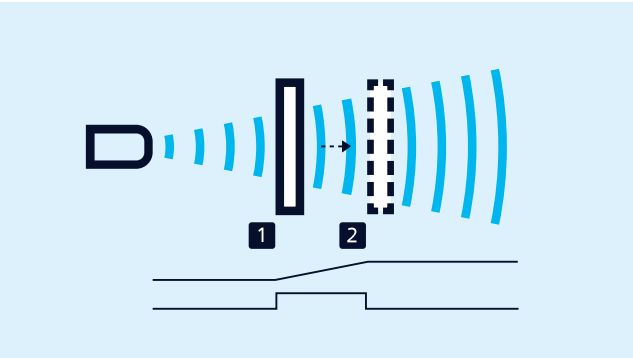

Teach-in of an analogue characteristic or a window with two switching points

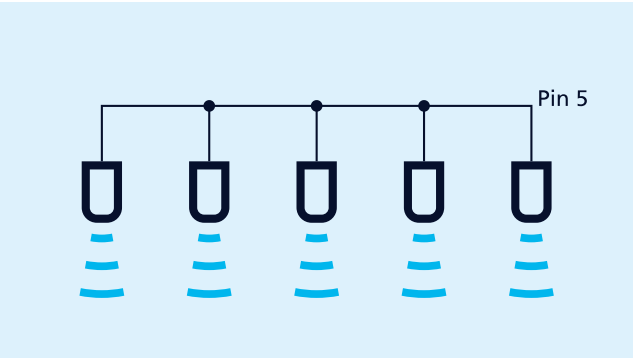

Synchronisation via pin 5

Synchronisation

permits the simultaneous use of multiple mic sensors in an application. To avoid mutual interference, the sensors can be synchronised with one another. To do this, all the sensors are electrically connected on pin 5.

NCC/NOC

and rising/falling analogue characteristic curve can also be set via pin 5.

The analogue sensor

checks the load connected to the output and then automatically switch to 4–20 mA current output or 0–10 V voltage output to ensure maximum ease of handling.

The Ics-25/DDD is equipped with three pnp switching outputs

which are set with the help of the Link-Control adapter LCA-2. In addition to this “offline” programming, all Ics sensors can also be parameterised on the PC with the LCA-2 and the Link-Control software .



Sensor connected to the PC via LCA-2 for programming

You have special requirements?

Nothing as simple as that.

With us, you can easily find an individual solution. Let us talk about your application: +49 231 97 51 51-82.

Archivsensor

Ics-25/IU/HV/QP R1

scale drawing

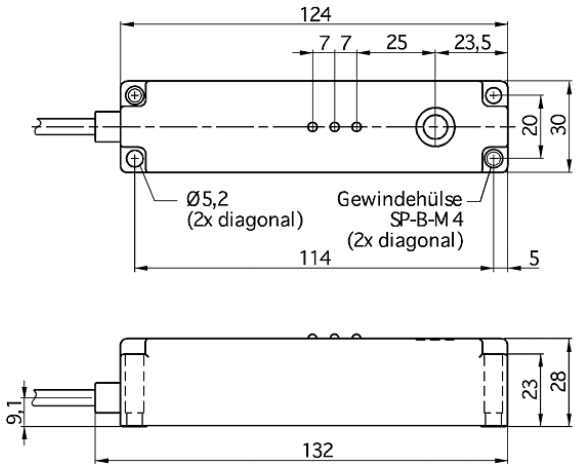

detection zone

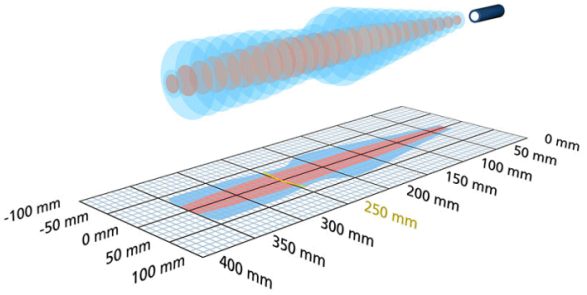

Successor model available	Ics-25/IU/QP
1 x analogue 4-20 mA + 0-10 V	350 mm
design	cuboidal
operating mode	analogue distance measurements
particularities	archive sensor flat housing lateral sound exit

Ultrasonic-Specific

means of measurement	echo propagation time measurement
transducer frequency	320 kHz
blind zone	30 mm
operating range	250 mm
max. range	350 mm
resolution	0.18 mm
reproducibility	± 0.15 %
accuracy	± 1 % (temperature drift internally compensated)

Electrical Data

operating voltage U_B	9 - 30 V d.c., reverse polarity protection
voltage ripple	± 10 %
no-load current consumption	≤ 70 mA
type of connection	2 m PUR cable, 5 × 0.25 mm^2

Outputs

output 1	analogue output current: 4-20 mA / voltage: 0-10 V (at $U_B \geq 15$ V), short-circuit-proof switchable rising/falling
response delay	50 ms
delay prior to availability	< 300 ms

Inputs

input 1	com input

Housing

material	PBT
ultrasonic transducer	polyurethane foam, epoxy resin with glass contents
class of protection to EN 60529	IP 65
operating temperature	-20°C to +70°C
storage temperature	-40°C to +85°C
weight	260 g

Technical Features/Characteristics

temperature compensation	yes
controls	com input
scope for settings	LCA-2 with LinkControl
synchronization	no
multiplex	no
indicators	

Accessories

deployable accessory	LCA-2 LCA-2 Koffer