microsonic



extract from our online catalogue:

Ipc+35/WK/CFI

current to: 2026-11-20

microsonic GmbH / Phoenixseestraße 7 / 44263 Dortmund / Germany / **T** +49 231 975151-0 / **F** +49 231 975151-51 / **E** info@microsonic.de
microsonic® ist eine eingetragene Marke der microsonic GmbH. Alle Rechte vorbehalten. Änderungen vorbehalten.



lpc+

lpc+ well equipped: 2 Push-Pull switching outputs or 1 Push-Pull switching output with an analogue output in M18 housing.

Highlights

- Analogue output 4–20 mA or 0–10 V plus 1 Push-Pull switching output in M18 design
- IO-Link interface › for support of the new industry standard
- Smart Sensor Profiles › more transparency between IO-Link Devices
- Improved temperature compensation › adjustment to working conditions within 120 seconds
- UL Listed to Canadian and US safety standards

Basics

- 2 Push-Pull switching outputs › pnp or npn basis
- 4 detection ranges with a measurement range of 20 mm to 1.3 m
- microsonic Teach-in on pin 5
- 0.1 mm resolution
- 10–30 V operating voltage
- LinkControl › for configuration of sensors from a PC

The Ipc+ ultrasonic sensors

are optionally equipped with two Push-Pull switching outputs or an analogue output plus a Push-Pull switching output. The compact series with M18 threaded sleeves coves four detection ranges from 20 mm to 1.3 m.

Ultrasonic sensors with the Push-Pull output stage support SIO and IO-Link modes. Sensors with analogue output are optionally available with 4–20 mA current output or 0–10 V voltage output.In SIO mode, sensors are configured using the microsonic Teach-in procedure on pin 5.

two output stages:

2 output stages and 4 detection ranges available:



2 Push-Pull-switching outputs, optionally in pnp or npn circuitry with IO-Link interface



1 Push-Pull switching output and analogue output 4–20 mA or 0–10 V

Sensors with switching output have three operating modes:

- Single switching point
- Two-way reflective barrier
- Window mode

Teach-in of a single switching point

- Place object to be detected (1) at the desired distance
- Apply $+U_B$ to pin 5 for about 3 seconds
- Then apply $+U_B$ to pin 5 again for about 1 second

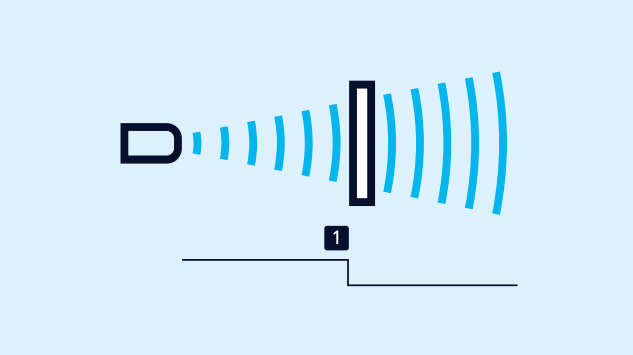

Teach-in of a switching point

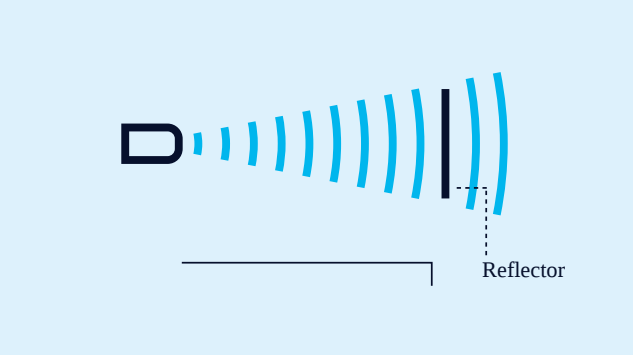

Teach-in of a two-way reflective barrier

Teach-in of a two-way reflective barrier

with a fixed reflector

- Apply +U_B to pin 5 for about 3 seconds
- Then apply +U_B to pin 5 again for about 10 seconds

For configuration of a window

- Place object at the near edge of the window (1)
- Apply +U_B to pin 5 for about 3 seconds
- Then move the object to the far edge of the window (2)
- Then apply +U_B to pin 5 again for about 1 second

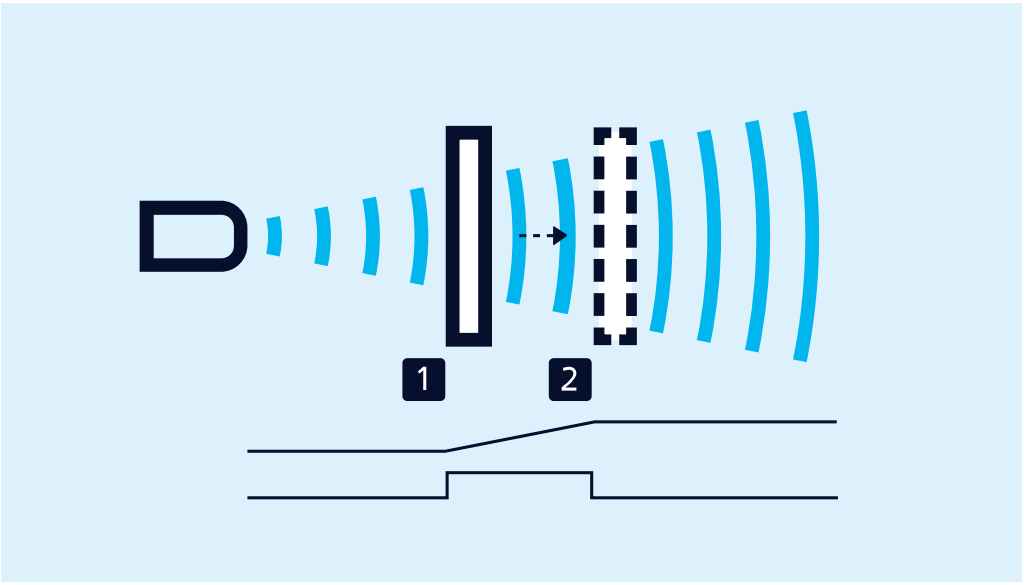

Teach-in of an analogue characteristic or a window with two switching points

NCC/NOC

and rising/falling analogue characteristic curve can also be set via pin 5.

LinkControl

optionally permits the extensive parameterisation of Ipc+ sensors. The LCA-2 LinkControl adapter , which is available as an accessory, can be used to connect Ipc+ sensors to the PC.



Sensor connected to the PC via LCA-2 for programming

Easy to synchronise

A number of Ipc+ ultrasonic sensors can be run closely packed in applications synchronised to stop them from influencing one another. To this end, the sync mode has to be activated and all the sensors are to be electrically connected one to another with pin 5.

If more than 10 sensors must be synchronised, this can be carried out with the SyncBox1 , which is available as an accessory.

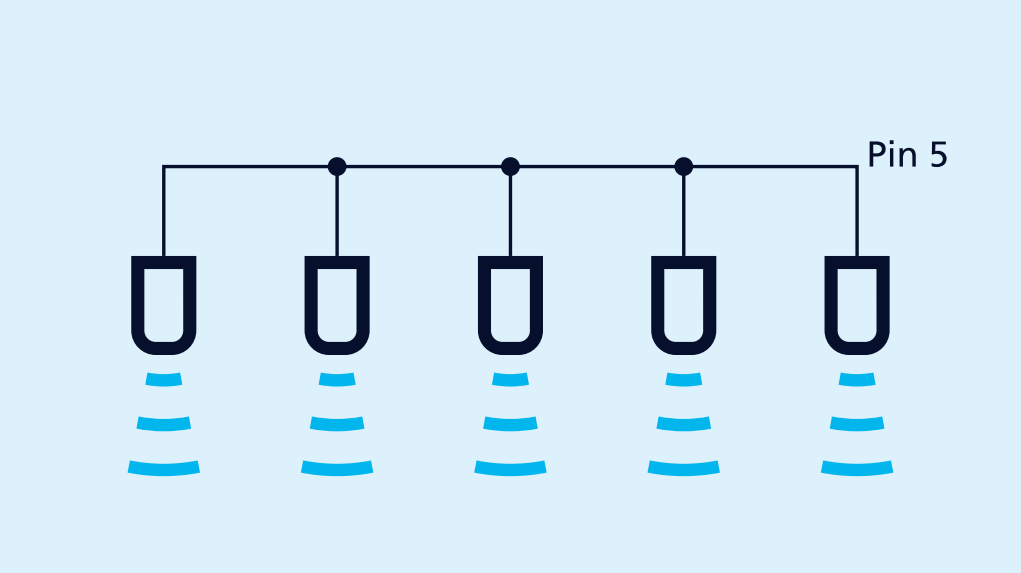

Synchronisation using pin 5

IO-Link integrated

in version 1.1. The Ipc+ ultrasonic sensors are equipped with Smart Sensor Profile, which creates more transparency between IO-Link devices.

You have special requirements?

Nothing as simple as that.

With us, you can easily find an individual solution. Let us talk about your application: +49 231 97 51 51-82.

lpc+35/WK/CFI

scale drawing

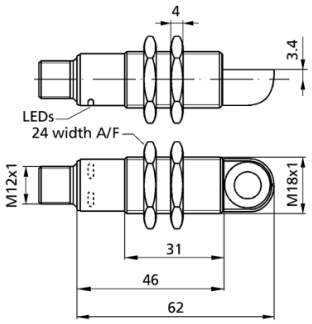

detection zone

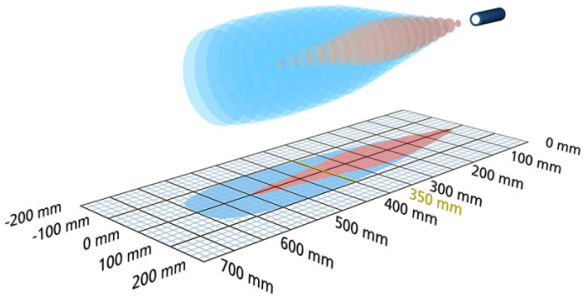

1 x Push-Pull + 1 x analog 4-20 mA

600 mm

design	cylindrical M18
operating mode	IO-Link proximity switch/reflective mode reflective barrier window mode analogue distance measurement
particularities	90° angular head IO-Link Smart Sensor Profile

Ultrasonic-Specific

means of measurement	echo propagation time measurement
transducer frequency	400 kHz
blind zone	65 mm
operating range	350 mm
max. range	600 mm
reproducibility	± 0.15 %
accuracy	± 1 % (temperature drift internally compensated)

Electrical Data

operating voltage U_B	10 - 30 V d.c., reverse polarity protection
voltage ripple	± 10 %
no-load current consumption	≤ 50 mA
type of connection	5-pin M12 initiator plug

Outputs

output 1	analogue output current: 4-20 mA switchable rising/falling
Ausgang 2	switching output Push-Pull, U_B-3 V, -U_B+3 V,I_{max} = 100 mA NOC/NCC adjustable, short-circuit-proof
switching hysteresis	5 mm
switching frequency	12 Hz
response delay	64 ms
delay prior to availability	< 300 ms

Inputs

input 1	com input synchronisation input teach-in input

Housing

material	brass sleeve, nickel-plated, plastic parts, PBT, PA
ultrasonic transducer	polyurethane foam, epoxy resin with glass contents
class of protection to EN 60529	IP 67
operating temperature	-25°C to +70°C
storage temperature	-40°C to +85°C
weight	40 g

Technical Features/Characteristics

temperature compensation	yes
controls	com input
scope for settings	Teach-in via com input on pin 5 LCA-2 with LinkControl IO-Link
synchronization	yes
multiplex	yes
indicators	2 x LED green, 2 x LED yellow

Accessories

deployable accessory	KST5A-2/M12 KST5A-5/M12 KST5G-2/M12 BF-18 LCA-2 LCA-2 Koffer SyncBox1 UF-90/M18

pin assignment

