microsonic



extract from our online catalogue:

lpc-25/CDU/M18

current to: 2026-11-19

microsonic GmbH / Phoenixseestraße 7 / 44263 Dortmund / Germany / **T** +49 231 975151-0 / **F** +49 231 975151-51 / **E** info@microsonic.de
microsonic® ist eine eingetragene Marke der microsonic GmbH. Alle Rechte vorbehalten. Änderungen vorbehalten.

Archivsensor

lpc-25/CDU/M18

scale drawing

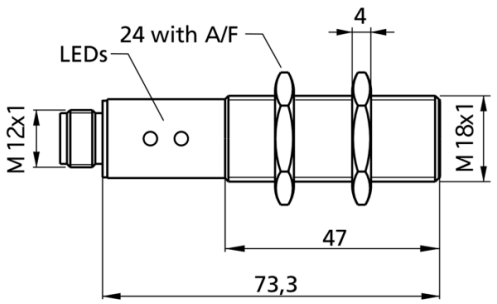

detection zone

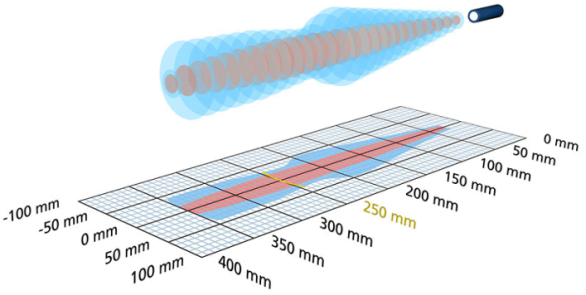

Successor model available	lpc+25/CFU
1 x pnp + 1 x analogue 0-10 V	350 mm
design	cylindrical M18
operating mode	proximity switch/reflective mode reflective barrier window mode

Ultrasonic-Specific

means of measurement	echo propagation time measurement
transducer frequency	320 kHz
blind zone	30 mm
operating range	250 mm
max. range	350 mm
resolution	0,069 mm bis 0,078 mm, abhängig vom eingestellten Analogfenster
reproducibility	± 0.15 %
accuracy	± 1 % (temperature drift internally compensated)

Electrical Data

operating voltage U_B	10 - 30 V d.c., reverse polarity protection
voltage ripple	± 10 %
no-load current consumption	≤ 40 mA
type of connection	5-pin M12 initiator plug

Outputs

output 1	analogue output voltage: 0-10 V, short-circuit-proof switchable rising/falling
Ausgang 2	switching output pnp: I_{max} = 200 mA (U_B-2V) NOC/NCC adjustable, short-circuit-proof
switching hysteresis	2.0 mm
switching frequency	25 Hz
response delay	24 ms
delay prior to availability	< 300 ms

Inputs

input 1	com input teach-in input

Housing

material	brass sleeve, nickel-plated, plastic parts, PBT
ultrasonic transducer	polyurethane foam, epoxy resin with glass contents
class of protection to EN 60529	IP 67
operating temperature	-25°C to +70°C
storage temperature	-40°C to +85°C
weight	43 g

Technical Features/Characteristics

temperature compensation	yes
controls	com input
scope for settings	Teach-in via com input on pin 5 LCA-2 with LinkControl
synchronization	yes
multiplex	no
indicators	1 x LED yellow: switch status, 1 x LED yellow: object in the window

Accessories

deployable accessory	KST5A-2/M12 KST5A-5/M12 KST5G-2/M12 KST5G-5/M12 UF-90/M18

pin assignment

