microsonic



extract from our online catalogue:

mic-102/IU/HV/M30/ K6/RDT Art.-Nr. 140951

current to: 2026-11-19

microsonic GmbH / Phoenixseestraße 7 / 44263 Dortmund / Germany / **T** +49 231 975151-0 / **F** +49 231 975151-51 / **E** info@microsonic.de
microsonic® ist eine eingetragene Marke der microsonic GmbH. Alle Rechte vorbehalten. Änderungen vorbehalten.

Archivsensor

mic-102/IU/HV/M30/ K6/RDT Art.-Nr. 140951

scale drawing

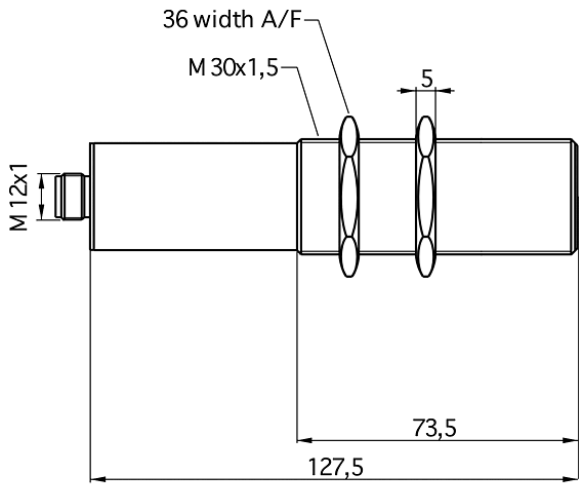

detection zone

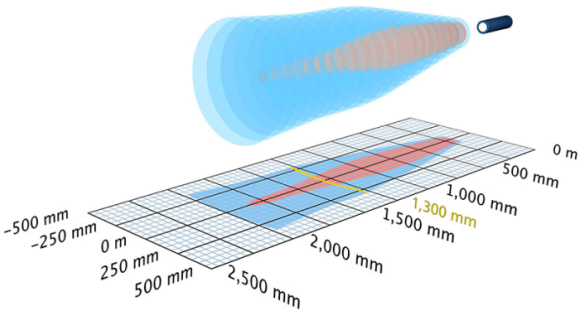

Successor model available	please inquire
1 x analogue 4-20 mA + 0-10 V	2,000 mm
design	cylindrical M30
operating mode	analogue distance measurements
particularities	archive sensor customised cable connection

Ultrasonic-Specific

means of measurement	echo propagation time measurement
transducer frequency	200 kHz
blind zone	200 mm
operating range	1,300 mm
max. range	2,000 mm
resolution	
reproducibility	± 0.15 %
accuracy	± 1 % (temperature drift internally compensated)

Electrical Data

operating voltage U_B	
voltage ripple	± 10 %
no-load current consumption	
type of connection	6 m PVC cable, 5 × 0.25 mm^2

Outputs

output 1	analogue output current: 4-20 mA / voltage: 0-10 V (at $U_B \geq 15$ V), short-circuit-proof switchable rising/falling
response delay	110 ms
delay prior to availability	< 1,500 ms

Inputs

input 1	com input

Housing

material	brass sleeve, nickel-plated, plastic parts, PBT, TPU
ultrasonic transducer	polyurethane foam, epoxy resin with glass contents
class of protection to EN 60529	
operating temperature	
storage temperature	
weight	210 g

Technical Features/Characteristics

controls	
scope for settings	Teach-in
synchronization	no
multiplex	no

pin assignment

