

extract from our online catalogue:

mic-102/IU/HV/M30

current to: 2026-11-20

microsonic GmbH / Phoenixseestraße 7 / 44263 Dortmund / Germany / **T** +49 231 975151-0 / **F** +49 231 975151-51 / **E** info@microsonic.de
microsonic® ist eine eingetragene Marke der microsonic GmbH. Alle Rechte vorbehalten. Änderungen vorbehalten.



mic

These completely metal mic sensors are available in two device designs with five different detection ranges.

Highlights

- M30 housing and M12 circular connector in metal design › for harsh usage conditions
- Automatic synchronisation › for simultaneous operation of up to ten sensors in close quarters
- UL Listed to Canadian and US safety standards

Basics

- 1 switching output in pnp variant
- Analogue output 4–20 mA and 0–10 V › with automatic switching between current and voltage outputs
- 5 detection ranges with a measurement range of 30 mm to 8 m
- microsonic Teach-in on pin 5
- 0.18 mm to 2.4 mm resolution
- Temperature compensation
- 9–30 V operating voltage
- LinkControl › for configuration of sensors from a PC

This very solid construction

is fully made of metal from the M30 housing to the M12 circular connector. Since the sensors do not contain any operating elements or signal lamps, they are especially suited for application under extreme ambient conditions with high mechanical loads for housing and plug connector. The sensors are available in five detection ranges and cover a measuring range of 30 mm up to 8 m.



M12 metal circular connector (left) and operation under rough conditions (right)

Two output levels

are available for all five detection ranges:

1 pnp switching output

1 analogue output 4–20 mA and 0–10 V

Sensors with switching output have three operating modes:

- Single switching point
- Two-way reflective barrier
- Window mode

Teach-in of a single switching point

- Place object to be detected (1) at the desired distance
- Apply +U_B to pin 5 for about 3 seconds
- Then apply +U_B to pin 5 again for about 1 second

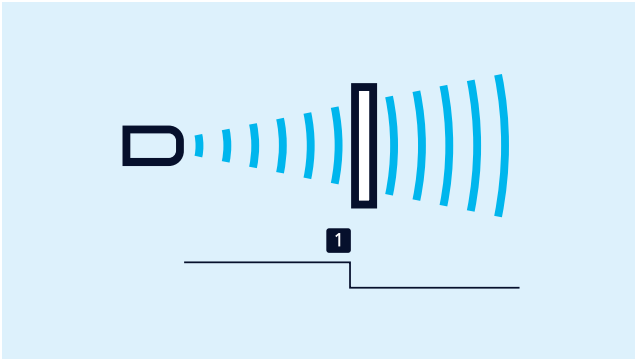

Teach-in of a switching point

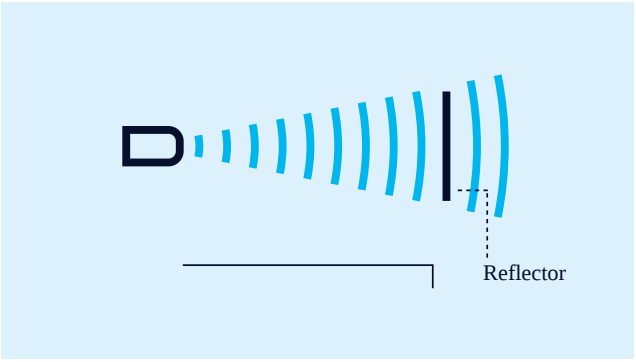

Teach-in of a two-way reflective barrier

Teach-in of a two-way reflective barrier

with a fixed reflector

- Apply +U_B to pin 5 for about 3 seconds
- Then apply +U_B to pin 5 again for about 10 seconds

For configuration of a window

- Place object at the near edge of the window (1)
- Apply +U_B to pin 5 for about 3 seconds
- Then move the object to the far edge of the window (2)
- Then apply +U_B to pin 5 again for about 1 second

NCC/NOC

and rising/falling analogue characteristic curve can also be set via pin 5.

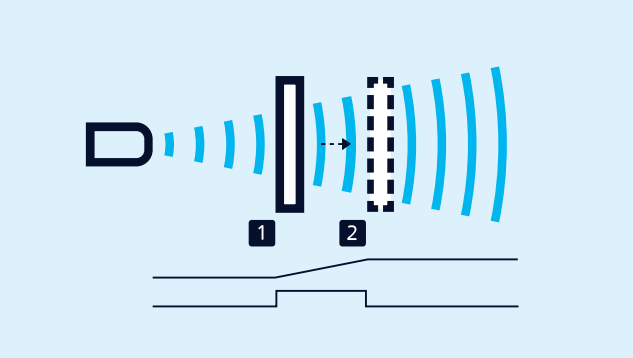

Teach-in of an analogue characteristic or a window with two switching points

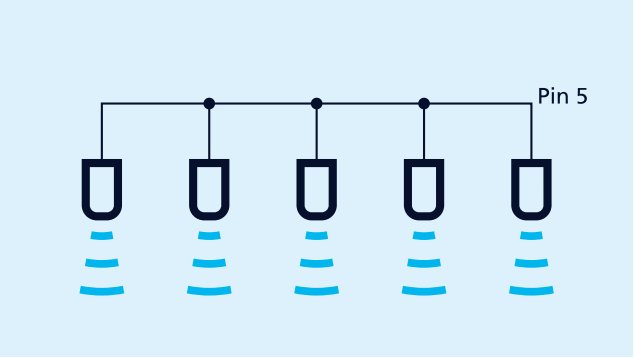

Synchronisation using pin 5

Synchronisation

permits the simultaneous use of multiple mic sensors in an application. To avoid mutual interference, the sensors can be synchronised with one another. To do this, all the sensors are electrically connected on pin 5.

If more than 10 sensors need to be synchronised, this can be carried out with the SyncBox1 , which is available as an accessory.

LinkControl

optionally permits the extensive parameterisation of mic sensors. The LCA-2 LinkControl adapter, which is available as an accessory, can be used to connect mic sensors to the PC.



Sensor connected to the PC via LCA-2 for programming

You have special requirements?

Nothing as simple as that.

With us, you can easily find an individual solution. Let us talk about your application: +49 231 97 51 51-82.

Archivsensor

mic-102/IU/HV/M30

scale drawing

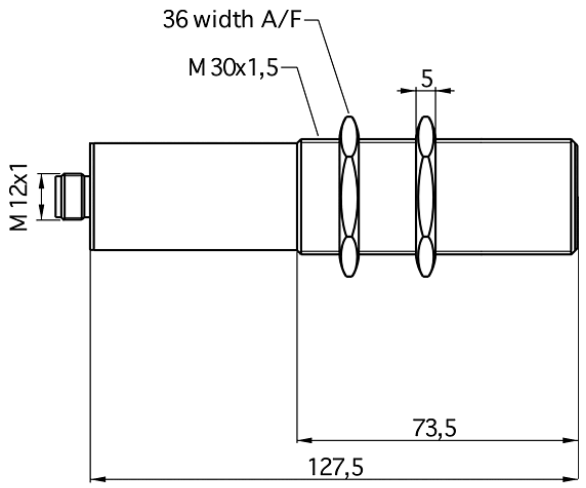

detection zone

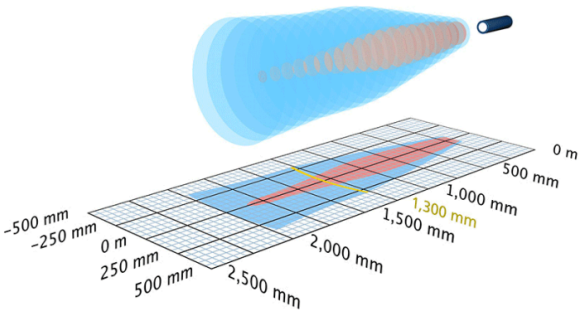

Successor model available	mic-130/IU/M
1 x analogue 4-20 mA + 0-10 V	2,000 mm
design	cylindrical M30
operating mode	analogue distance measurements
particularities	archive sensor

Ultrasonic-Specific

means of measurement	echo propagation time measurement
transducer frequency	200 kHz
blind zone	200 mm
operating range	1,300 mm
max. range	2,000 mm
resolution	0.36 mm
reproducibility	± 0.15 %
accuracy	± 1 % (temperature drift internally compensated)

Electrical Data

operating voltage U_B	
voltage ripple	± 10 %
no-load current consumption	
type of connection	

Outputs

output 1	analogue output current: 4-20 mA / voltage: 0-10 V (at $U_B \geq 15$ V), short-circuit-proof switchable rising/falling
response delay	110 ms
delay prior to availability	< 1,500 ms

Inputs

input 1	com input

Housing

material	brass sleeve, nickel-plated, plastic parts, PBT, TPU
ultrasonic transducer	polyurethane foam, epoxy resin with glass contents
class of protection to EN 60529	
operating temperature	
storage temperature	
weight	210 g

Technical Features/Characteristics

controls	2 push-buttons
scope for settings	Teach-in
synchronization	no
multiplex	no
indicators	2 x three-colour LED

pin assignment

