microsonic



extract from our online catalogue:

nero-100/CU

current to: 2026-11-20

microsonic GmbH / Phoenixseestraße 7 / 44263 Dortmund / Germany / **T** +49 231 975151-0 / **F** +49 231 975151-51 / **E** info@microsonic.de
microsonic® ist eine eingetragene Marke der microsonic GmbH. Alle Rechte vorbehalten. Änderungen vorbehalten.



nero

Ultrasonic proximity switch nero in M18 plastic sleeve with 4 detection ranges

Highlights

Basics

- Variant with 90° angled head
- UL Listed to Canadian and US safety standards
- 1 switching output › pnp or npn basis
- Analogue output 4–20 mA or 0–10 V
- 4 detection ranges with a measurement range of 20 mm to 1.3 m
- microsonic-Teach-in
- 0.2 mm resolution
- 10–30 V operating voltage

nero ultrasonic proximity switches

are available in a M18 plastic sleeve. The ultrasonic proximity switches detect contactless and reliable objects with four detection ranges from 20 mm to 1.3 m.

Two output stages

are available for 4 detection ranges:

1 switching output with pnp or npn switching technology

1 analogue output 4–20 mA or 0–10 V

Sensors with switching output have three operating modes:

- Single switching point
- Two-way reflective barrier
- Window mode

Teach-in of a single switching point

- Place object to be detected (1) at the desired distance
- Apply $+U_B$ to pin 2 for about 3 seconds
- Then apply $+U_B$ to pin 2 again for about 1 second

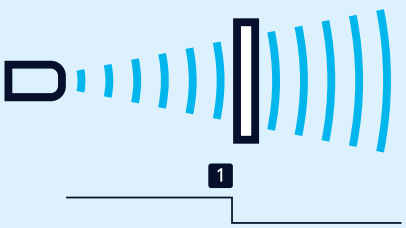

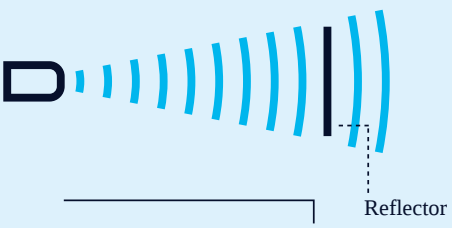

Teach-in of a two-way reflective barrier

with a fixed reflector

- Apply +U_B to pin 2 for about 3 seconds
- Then apply +U_B to pin 2 again for about 10 seconds

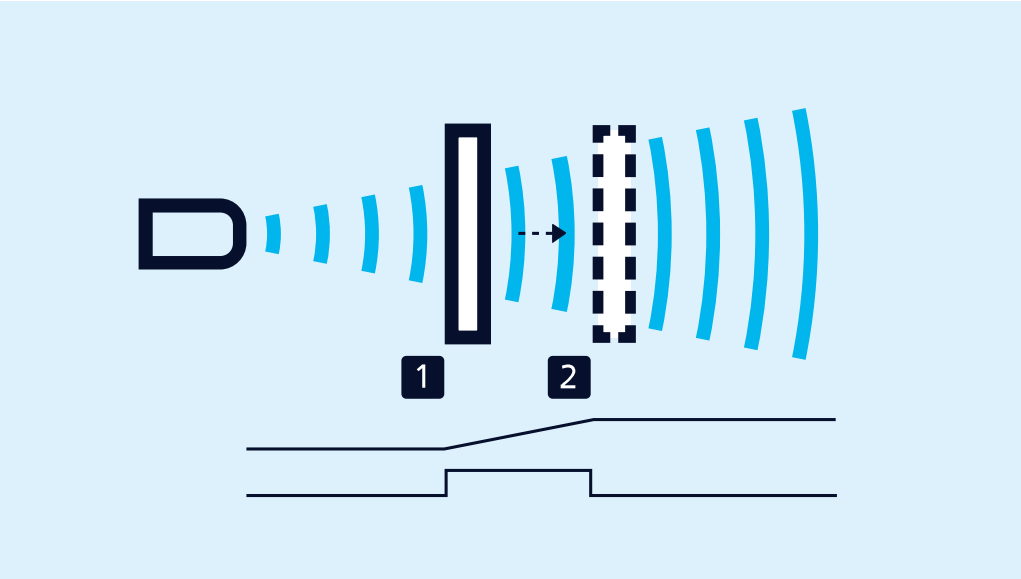

Teach-in of an analogue characteristic or a window with two switching points

For configuration of a window

- Place object at the near edge of the window (1)
- Apply +U_B to pin 2 for about 3 seconds
- Then move the object to the far edge of the window (2)
- Then apply +U_B to pin 2 again for about 1 second

NCC/NOC

and rising/falling analogue characteristic curve can also be set via pin 2.

One green and one yellow LED

indicate the state of the output and support microsonic Teach-in.

You have special requirements?

Nothing as simple as that.

With us, you can easily find an individual solution. Let us talk about your application: +49 231 97 51 51-82.

nero-100/CU

scale drawing

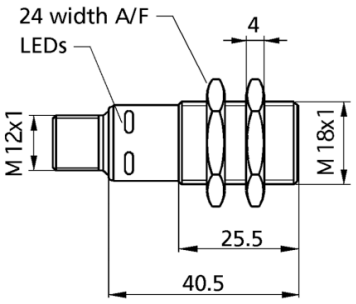

detection zone

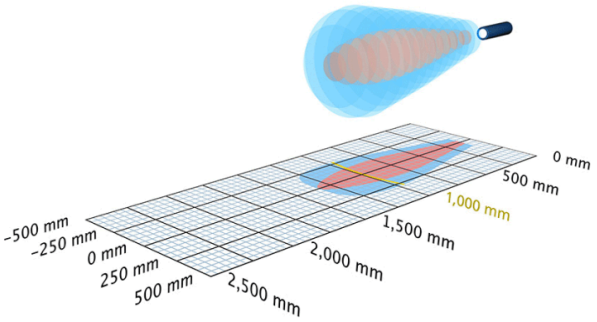

1 x analogue 0-10 V

1,300 mm

design	cylindrical M18
operating mode	analogue distance measurements
particularities	UL Listed

Ultrasonic-Specific

means of measurement	echo propagation time measurement
transducer frequency	200 kHz
blind zone	120 mm
operating range	1,000 mm
max. range	1,300 mm
resolution	0.056 mm to 1.525 mm, depending on the analogue window
reproducibility	± 0.15 %
accuracy	temperature drift 0.17 %/K

Electrical Data

operating voltage U_B	15 V bis 30 V DC, verpolfest
voltage ripple	± 10 %
no-load current consumption	≤ 40 mA
type of connection	4-pin M12 initiator plug

Outputs

output 1	analogue output voltage: 0-10 V, short-circuit-proof switchable rising/falling
response delay	80 ms
delay prior to availability	< 300 ms

Inputs

input 1	Teach-in input

Housing

material	PBT
ultrasonic transducer	polyurethane foam, epoxy resin with glass contents
class of protection to EN 60529	IP 67
operating temperature	-25°C to +70°C
storage temperature	-40°C to +85°C
weight	15 g
further versions	nero-100/WK/CU
further versions	90° angular head

Technical Features/Characteristics

temperature compensation	no
controls	control input
scope for settings	Teach-in
synchronization	no
multiplex	no
indicators	LED green: working, LED yellow: state of output

Accessories

deployable accessory	BF-18 KST4A-2/M12 KST4A-5/M12 KST4G-2/M12 KST4G-5/M12

pin assignment

