microsonic



extract from our online catalogue:

nero-25/CD

current to: 2026-11-20

microsonic GmbH / Phoenixseestraße 7 / 44263 Dortmund / Germany / **T** +49 231 975151-0 / **F** +49 231 975151-51 / **E** info@microsonic.de
microsonic® ist eine eingetragene Marke der microsonic GmbH. Alle Rechte vorbehalten. Änderungen vorbehalten.



nero

Ultrasonic proximity switch nero in M18 plastic sleeve with 4 detection ranges

Highlights

Basics

- Variant with 90° angled head
- UL Listed to Canadian and US safety standards
- 1 switching output › pnp or npn basis
- Analogue output 4–20 mA or 0–10 V
- 4 detection ranges with a measurement range of 20 mm to 1.3 m
- microsonic-Teach-in
- 0.2 mm resolution
- 10–30 V operating voltage

nero ultrasonic proximity switches

are available in a M18 plastic sleeve. The ultrasonic proximity switches detect contactless and reliable objects with four detection ranges from 20 mm to 1.3 m.

Two output stages

are available for 4 detection ranges:

1 switching output with pnp or npn switching technology

1 analogue output 4–20 mA or 0–10 V

Sensors with switching output have three operating modes:

- Single switching point
- Two-way reflective barrier
- Window mode

Teach-in of a single switching point

- Place object to be detected (1) at the desired distance
- Apply $+U_B$ to pin 2 for about 3 seconds
- Then apply $+U_B$ to pin 2 again for about 1 second

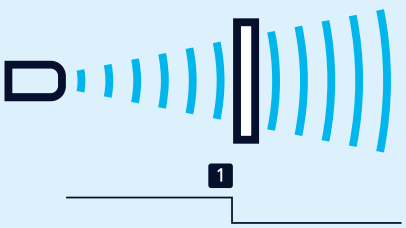

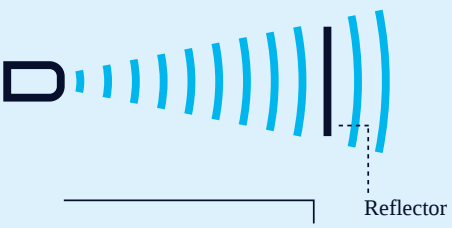

Teach-in of a two-way reflective barrier

with a fixed reflector

- Apply +U_B to pin 2 for about 3 seconds
- Then apply +U_B to pin 2 again for about 10 seconds

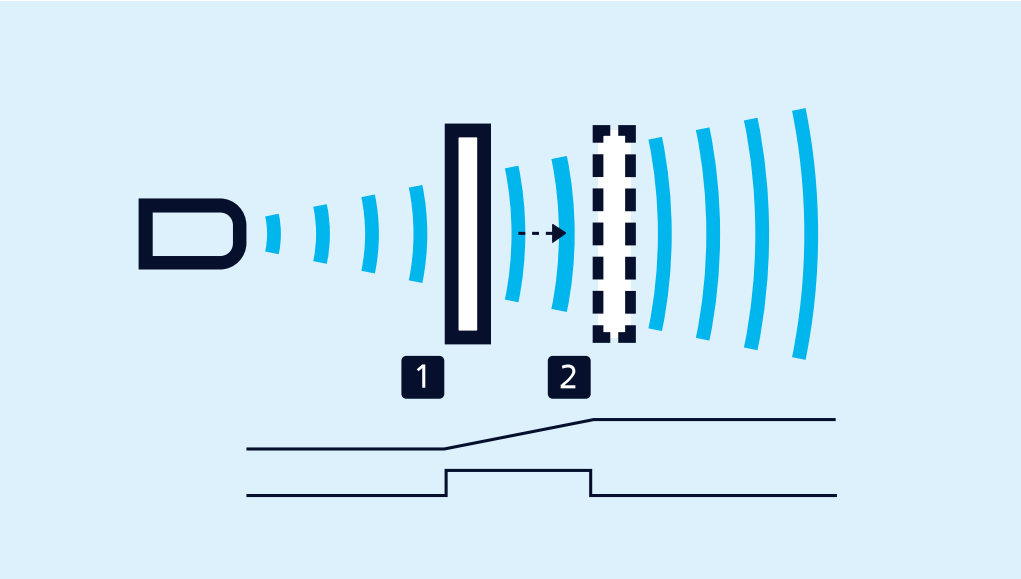

Teach-in of an analogue characteristic or a window with two switching points

For configuration of a window

- Place object at the near edge of the window (1)
- Apply +U_B to pin 2 for about 3 seconds
- Then move the object to the far edge of the window (2)
- Then apply +U_B to pin 2 again for about 1 second

NCC/NOC

and rising/falling analogue characteristic curve can also be set via pin 2.

One green and one yellow LED

indicate the state of the output and support microsonic Teach-in.

You have special requirements?

Nothing as simple as that.

With us, you can easily find an individual solution. Let us talk about your application: +49 231 97 51 51-82.

nero-25/CD

scale drawing

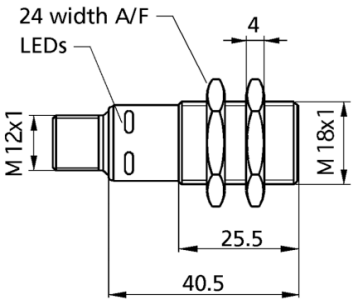

detection zone

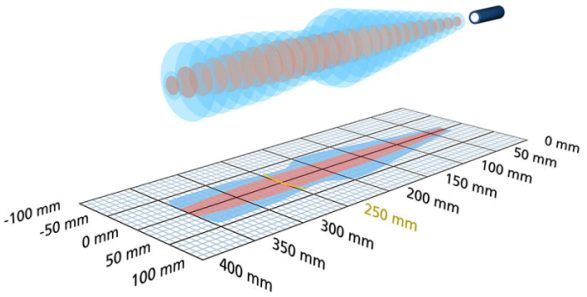

1 x pnp

350 mm

design	cylindrical M18
operating mode	proximity switch/reflective mode reflective barrier window mode
particularities	UL Listed

Ultrasonic-Specific

means of measurement	echo propagation time measurement
transducer frequency	320 kHz
blind zone	30 mm
operating range	250 mm
max. range	350 mm
resolution	0.20 mm
reproducibility	± 0.15 %
accuracy	temperature drift 0.17 %/K

Electrical Data

operating voltage U_B	10 - 30 V d.c., reverse polarity protection
voltage ripple	± 10 %
no-load current consumption	≤ 40 mA
type of connection	4-pin M12 initiator plug

Outputs

output 1	switching output pnp: I_{max} = 200 mA (U_B-2V)
switching hysteresis	3 mm
switching frequency	25 Hz
response delay	32 ms
delay prior to availability	< 300 ms

Inputs

input 1	Teach-in input

Housing

material	PBT
ultrasonic transducer	polyurethane foam, epoxy resin with glass contents
class of protection to EN 60529	IP 67
operating temperature	-25°C to +70°C
storage temperature	-40°C to +85°C
weight	15 g
further versions	nero-25/WK/CD
further versions	90° angular head

Technical Features/Characteristics

temperature compensation	no
controls	control input
scope for settings	Teach-in
synchronization	no
multiplex	no
indicators	1 x LED green: working, 1 x LED yellow: switch status

Accessories

deployable accessory	BF-18 KST4A-2/M12 KST4A-5/M12 KST4G-2/M12 KST4G-5/M12

pin assignment

