microsonic



extract from our online catalogue:

pico+15/TF/I

current to: 2026-11-19

microsonic GmbH / Phoenixseestraße 7 / 44263 Dortmund / Germany / **T** +49 231 975151-0 / **F** +49 231 975151-51 / **E** info@microsonic.de
microsonic® ist eine eingetragene Marke der microsonic GmbH. Alle Rechte vorbehalten. Änderungen vorbehalten.



pico+TF

The pico+TF sensors are ideal for the non-contact fill level measurement of chemically aggressive liquids or granules.

Highlights

- PTFE membrane › for protection against aggressive media
- M22 sleeve in PVDF
- IO-Link interface › for support of new industry standard
- Automatic synchronisation and multiplex operation › for simultaneous operation of up to ten sensors in close quarters

Basics

- 1 Push-Pull switching output › pnp or npn basis
- Analogue output 4–20 mA or 0–10 V
- 4 detection ranges with a measurement range of 20 mm to 1,300 mm
- microsonic Teach-in on pin 5
- 0.069 mm resolution
- Temperature compensation
- 10–30 V operating voltage
- LinkControl › for configuration of sensors from a PC

pico+TF ultrasonic sensors

The compact dimensions of the pico+TF sensors makes them ideal for fill-level measurement in housings of restricted dimensions. The ultrasonic transformer is protected against aggressive media by a PTFE film. The exterior PVDF coating with its M22 × 1.5 external thread seals the ultrasonic transformer from the sensor housing.

The M22 sensors detect in a contactless fashion and are reliable within a measuring range of 20 mm to 1,300 mm. The ultrasonic sensor is the best choice for non-contact fill level measurement with chemically aggressive liquids or granules.

A typical application for these sensor line is the fill level monitoring of aggressive paints and inks such as those used in the digital printing sector. These inks often contain ketone. In addition to the high chemical resistance of the sensor, its size makes it especially suited to use in restricted spaces. Regular filling and emptying of the tank can produce wave motions in the tank system, which can be compensated using the internal filter setting.

For the pico+TF sensor family

there are 2 output stages and 4 detection ranges available:

1 Push-Pull switching output with pnp or npn switching technology with IO-Link interface

1 analogue output 4–20 mA or 0–10 V



The pico+TF ultrasonic sensor continuously detects the fill level of liquids and granules.

Sensors with switching output have three operating modes:

- Single switching point
- Two-way reflective barrier
- Window mode

Teach-in of a single switching point

- Place object to be detected (1) at the desired distance
- Apply $+U_B$ to pin 5 for about 3 seconds
- Then apply $+U_B$ to pin 5 again for about 1 second

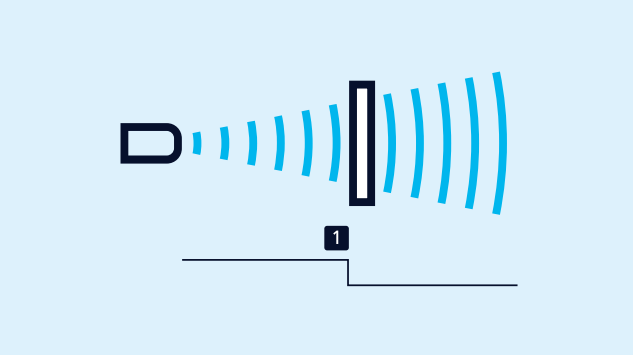

Teach-in of a switching point

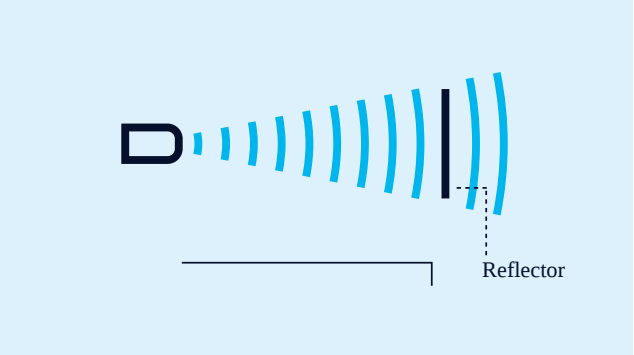

Teach-in of a two-way reflective barrier

Teach-in of a two-way reflective barrier

with a fixed reflector

- Apply +U_B to pin 5 for about 3 seconds
- Then apply +U_B to pin 5 again for about 10 seconds

For configuration of a window

- Place object at the near edge of the window (1)
- Apply +U_B to pin 5 for about 3 seconds
- Then move the object to the far edge of the window (2)
- Then apply +U_B to pin 5 again for about 1 second

NCC/NOC

and rising/falling analogue characteristic curve can also be set via pin 5.

One green and one yellow LED

indicate the state of the output and support microsonic Teach-in.

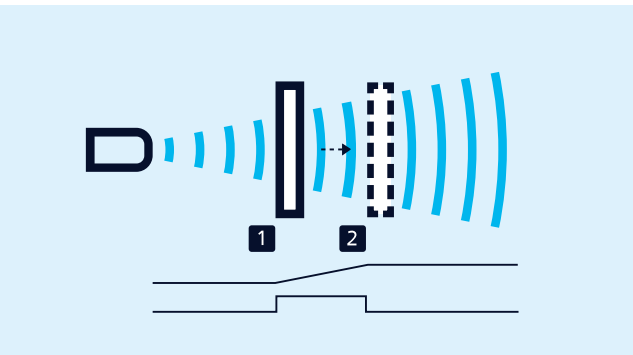

Teach-in of an analogue characteristic or a window with two switching points

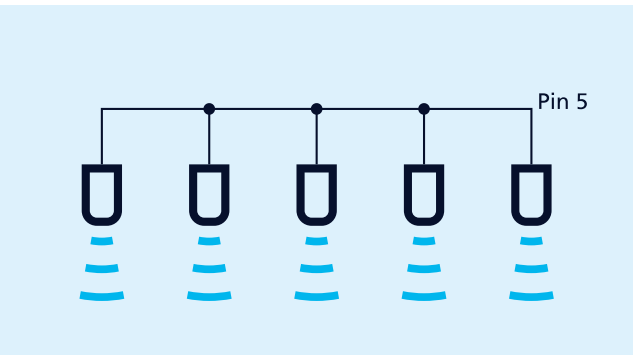

Synchronisation using pin 5

Easy to synchronise

A number of pico+TF sensors can be run closely packed in applications synchronised to stop them from influencing one another. To this end, the sync mode has to be activated and all the sensors are to be electrically connected one to another with pin 5.

If more than 10 sensors must be synchronised, this can be carried out with the SyncBox1 , which is available as an accessory.

In instances of where a number of sensors are run at an IO-Link master, then the master's function is to assume synchronisation.

LinkControl

optionally permits the extensive parameterisation of pico+TF sensors. The LCA-2 LinkControl-Adapter , which is available as an accessory, can be used to connect pico+TF sensors to the PC.



Sensor connected to the PC via LCA-2 for programming

IO-Link integrated

in version 1.0 for level sensors with switching output.

You have special requirements?

Nothing as simple as that.

With us, you can easily find an individual solution. Let us talk about your application: +49 231 97 51 51-82.

pico+15/TF/I

scale drawing

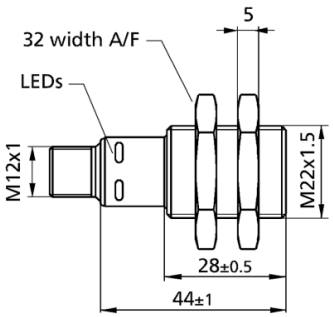

detection zone

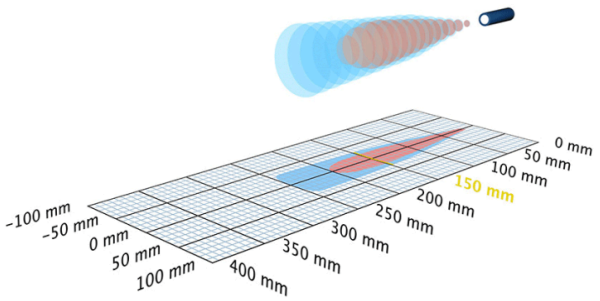

1 x analogue 4-20 mA

250 mm

design	cylindrical M22
operating mode	analogue distance measurements
particularities	high chemical resistance PVDF housing schlankes Schallfeld

Ultrasonic-Specific

means of measurement	echo propagation time measurement
transducer frequency	380 kHz
blind zone	20 mm
operating range	150 mm
max. range	250 mm
resolution	0.069 mm
reproducibility	± 0.15 %
accuracy	± 1 % (temperature drift internally compensated)

Electrical Data

operating voltage U_B	10 - 30 V d.c., reverse polarity protection
voltage ripple	± 10 %
no-load current consumption	≤ 40 mA
type of connection	5-pin M12 initiator plug

Outputs

output 1	analogue output current: 4-20 mA switchable rising/falling
response delay	32 ms
delay prior to availability	< 300 ms

Inputs

input 1	com input synchronisation input teach-in input

Housing

material	PVDF, PBT
ultrasonic transducer	coated with PTFE film, FFKM O-ring
class of protection to EN 60529	IP 67
operating temperature	-25°C to +70°C
storage temperature	-40°C to +85°C
weight	30 g

Technical Features/Characteristics

temperature compensation	yes
controls	com input
scope for settings	Teach-in via com input on pin 5 LCA-2 with LinkControl
synchronization	yes
multiplex	yes
indicators	1 x LED green: working, 1 x LED yellow: switch status

Accessories

deployable accessory	KST5A-2/M12 KST5A-5/M12 KST5G-2/M12 KST5G-5/M12 LCA-2 LCA-2 Koffer

pin assignment

