microsonic



extract from our online catalogue:

pico+35/F

current to: 2026-11-20

microsonic GmbH / Phoenixseestraße 7 / 44263 Dortmund / Germany / **T** +49 231 975151-0 / **F** +49 231 975151-51 / **E** info@microsonic.de
microsonic® ist eine eingetragene Marke der microsonic GmbH. Alle Rechte vorbehalten. Änderungen vorbehalten.



pico+

The new M18 ultrasonic sensor: 4 ranges, 3 operating modes, 2 housing's designs, 1 IO-Link interface.

Highlights

- Variant with 90° angled head
- IO-Link interface › for support of the new industry standard
- Smart Sensor Profile › more transparency between IO-Link Devices
- Automatic synchronisation and multiplex operation › for simultaneous operation of up to ten sensors in close quarters
- Improved temperature compensation › adjustment to working conditions within 120 seconds
- UL Listed › to Canadian and US safety standards

Basics

- 1 Push-Pull switching output › pnp or npn basis
- Analogue output 4–20 mA or 0–10 V
- 4 detection ranges with a measurement range of 20 mm to 1.3 m
- microsonic Teach-in on pin 5
- 0.069 mm to 0.1 mm resolution
- 10–30 V operating voltage
- LinkControl › for configuration of sensors from a PC

The pico+ ultrasonic sensors

are a compact series with M18 threaded sleeves and a housing length of only 41 mm. In addition to the variants with an axial beam direction, there is also a housing variant with a 90° angled head and radial beam direction.

With four detection ranges from 20 mm to 1.3 m and three different output stages, this sensor family covers a wide range of applications.

Sensors with the Push-Pull output stage support SIO and IO link modes. Sensors with analogue output are optionally available with 4–20 mA current output or 0–10 V voltage output.

In SIO mode, sensors are configured using the microsonic Teach-in procedure on pin 5.

For the pico+ sensor family

there are 2 output stages and 4 detection ranges available:



1 Push-Pull switching output with pnp or npn switching technology with IO-Link interface



1 analogue output 4–20 mA or 0–10 V

Sensors with switching output have three operating modes:

- Single switching point
- Two-way reflective barrier
- Window mode

Teach-in of a single switching point

- Place object to be detected (1) at the desired distance
- Apply $+U_B$ to pin 5 for about 3 seconds
- Then apply $+U_B$ to pin 5 again for about 1 second

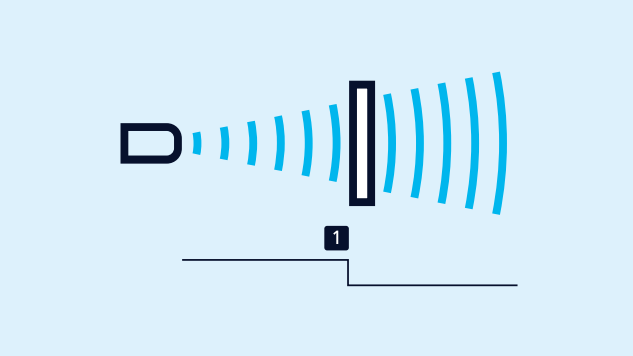

Teach-in of a switching point

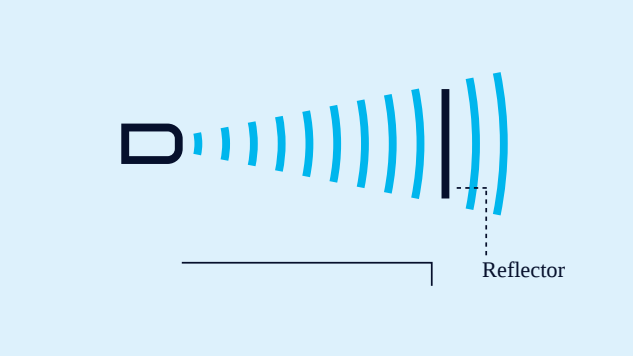

Teach-in of a two-way reflective barrier

Teach-in of a two-way reflective barrier

with a fixed reflector

- Apply +U_B to pin 5 for about 3 seconds
- Then apply +U_B to pin 5 again for about 10 seconds

For configuration of a window

- Place object at the near edge of the window (1)
- Apply +U_B to pin 5 for about 3 seconds
- Then move the object to the far edge of the window (2)
- Then apply +U_B to pin 5 again for about 1 second

NCC/NOC

and rising/falling analogue characteristic curve can also be set via pin 5.

One green and one yellow LED

indicate the state of the output and support microsonic Teach-in.

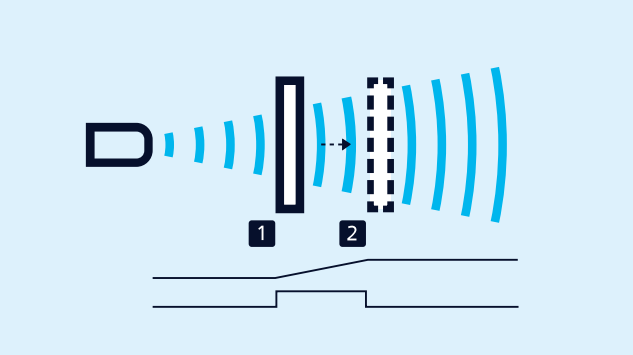

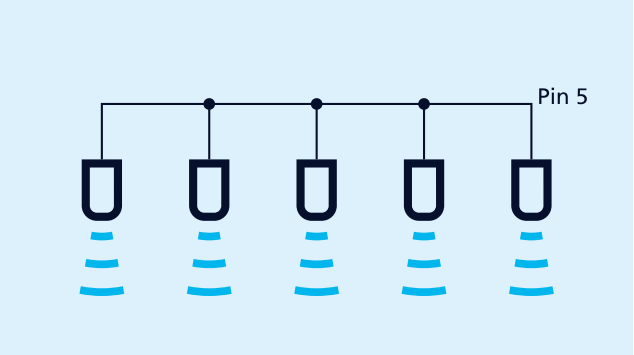

Teach-in of an analogue characteristic or a window with two switching points

Synchronisation using pin 5

Easy to synchronise

A number of pico+ sensors can be run closely packed in applications synchronised to stop them from influencing one another. To this end, the sync mode has to be activated and all the sensors are to be electrically connected one to another with pin 5.

If more than 10 sensors must be synchronised, this can be carried out with the SyncBox1 , which is available as an accessory.

In instances of where a number of sensors are run at an IO-Link master, then the master's function is to assume synchronisation.

LinkControl

optionally permits the extensive parameterisation of pico+ sensors. The LCA-2 LinkControl-Adapter , which is available as an accessory, can be used to connect pico+ sensors to the PC.



Sensor connected to the PC via LCA-2 for programming

Updated to IO-Link version 1.1

The pico+ sensors with the extension „/A" in the order name are updated to IO-Link version 1.1 and support the Smart Sensor Profile. Please note that these sensor with the updated IO-Link version do not support IO-Link version 1.0 any longer. For example, when replacing pico+15/F with a pico+15/F/A you have to integrate the new device ID in the IO-Link master. In SIO mode, the sensors are compatible with each other.

The predecessor models pico+xxx/F can be found in the sensor archive.

You have special requirements?

Nothing as simple as that.

With us, you can easily find an individual solution. Let us talk about your application: +49 231 97 51 51-82.

Archivsensor

pico+35/F

scale drawing

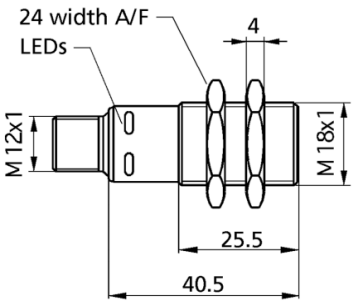

detection zone

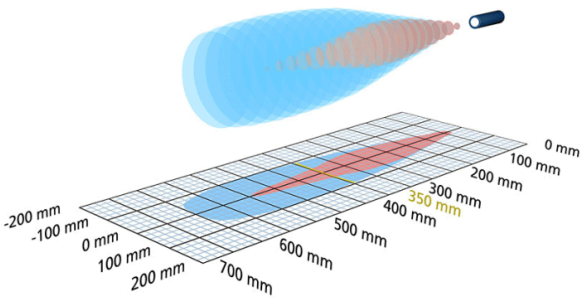

Successor model available	pico+35/F/A
1 x Push-Pull	600 mm
design	cylindrical M18
operating mode	IO-Link proximity switch/reflective mode reflective barrier window mode
particularities	IO-Link UL Listed

Ultrasonic-Specific

means of measurement	echo propagation time measurement
transducer frequency	400 kHz
blind zone	65 mm
operating range	350 mm
max. range	600 mm
resolution	0.069 mm
reproducibility	± 0.15 %
accuracy	± 1 % (temperature drift internally compensated)

Electrical Data

operating voltage U_B	10 - 30 V d.c., reverse polarity protection
voltage ripple	± 10 %
no-load current consumption	≤ 40 mA
type of connection	5-pin M12 initiator plug

Outputs

output 1	switching output Push-Pull, U_B-3 V, -U_B+3 V,I_{max} = 100 mA
switching hysteresis	5 mm
switching frequency	12 Hz
response delay	64 ms
delay prior to availability	< 300 ms

Inputs

input 1	com input synchronisation input teach-in input

Housing

material	brass sleeve, nickel-plated, plastic parts, PBT
ultrasonic transducer	polyurethane foam, epoxy resin with glass contents
class of protection to EN 60529	IP 67
operating temperature	-25°C to +70°C
storage temperature	-40°C to +85°C
weight	30 g
further versions	pico+35/WK/F
further versions	90° angular head

Technical Features/Characteristics

temperature compensation	yes
controls	com input
scope for settings	Teach-in via com input on pin 5 LCA-2 with LinkControl IO-Link
synchronization	yes
multiplex	yes
indicators	1 x LED green: working, 1 x LED yellow: switch status

Accessories

deployable accessory	KST5A-2/M12 KST5A-5/M12 KST5G-2/M12 KST5G-5/M12 BF-18 LCA-2 LCA-2 Koffer SyncBox1 UF-90/M18

pin assignment

