microsonic



extract from our online catalogue:

sks-15/CE

current to: 2026-11-20

microsonic GmbH / Phoenixseestraße 7 / 44263 Dortmund / Germany / **T** +49 231 975151-0 / **F** +49 231 975151-51 / **E** info@microsonic.de
microsonic® ist eine eingetragene Marke der microsonic GmbH. Alle Rechte vorbehalten. Änderungen vorbehalten.



sks

The smallest of its kind: The sks sensor in cubical housing.

Highlights

- Very small housing dimensions with two M3 threaded sleeves
- Installation-compatible with many optical sensors › a true alternative for critical applications
- IO-Link interface › for support of the new industry standard
- Smart Sensor Profiles › more transparency between IO-Link Devices
- Optionally with SoundPipe sks1 waveguide attachment
- Improved temperature compensation › adjustment to working conditions within 45 seconds
- UL Listed to Canadian and US safety standards

Basics

- 1 switching output in pnp or npn variant
- 1 Push-Pull switching output › pnp or npn basis
- Analogue output 4-20 mA or 0-10 V
- microsonic Teach-in using a button
- 0.1 mm resolution
- 20–30 V operating voltage

The sks sensor

is the smallest cuboidal ultrasonic sensor from microsonic and features a housing design reduced by 33% compared to the zws sensors.



The sks ultrasonic sensor

The miniature housing of the sks ultrasonic sensor fits in constricted installation locations e.g. for sampling conductor boards and wafer in the electronics industry, for presence checks on conveyor bands or fill-level measurement in small containers. When capacitive or optical sensors come up against their physical limits, installation compatibility of ultrasonic sensors with many optical sensors enable their deployment: simply secured with two M3 screw sockets.

For the sks sensor family

three output versions are available:



1 Push-Pull switching output with IO-Link interface



1 switching output, optionally in pnp- or npn-circuitry



1 analogue output 4–20 mA or 0–10 V

The temperature compensation

of the analogue sensors profits from a significant improvement. The sensors reach their operating point only 45 seconds after activation of the operating voltage. We now compensate for the influence of self-heating and installation conditions. This brings improved precision shortly after activation of the supply voltage and in running operation.

The Teach-in button

on the top of the sensor allows for the convenient configuration of the desired switching distance and operating mode.

Two LEDs

show the operating state of the sensor.

The sks sensor with switching output has three operating modes:

- Single switching point,
- Two-way reflective barrier and
- Window mode

The switching output is set by

positioning the object to be detected within the desired distance (1) to the sensor, pressing the button for approx. 3 seconds and then pressing it once more for approx. 1 second. Ready.

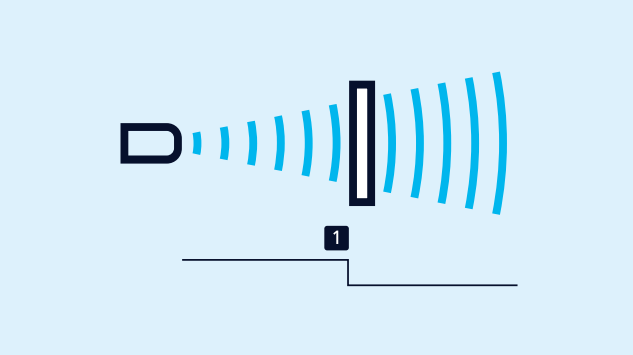

Teach-in of a switching point

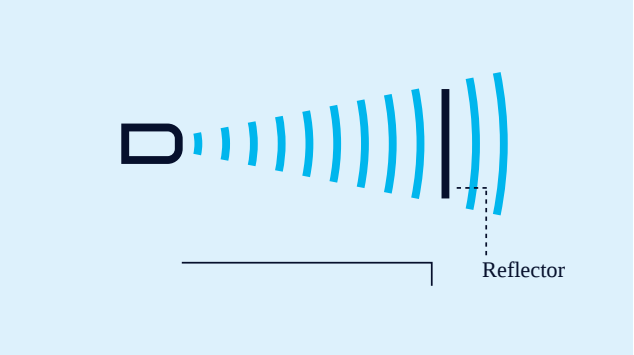

Teach-in of a two-way reflective barrier

A two-way reflective barrier

can be set up with the help of a permanently mounted reflector by mounting the sks sensor and the reflector. Then press the button for approx. 3 seconds and then pressing it once more for approx. 10 seconds. Now, the two-way reflective barrier has been set.

Set the analogue output

by initally positioning the object to the detected on the sensor-close window limit (1), pressing the button for approx. 3 seconds, shifting the object to the sensor-distant window limit and pressing the button once more for approx. 1 second. Ready.

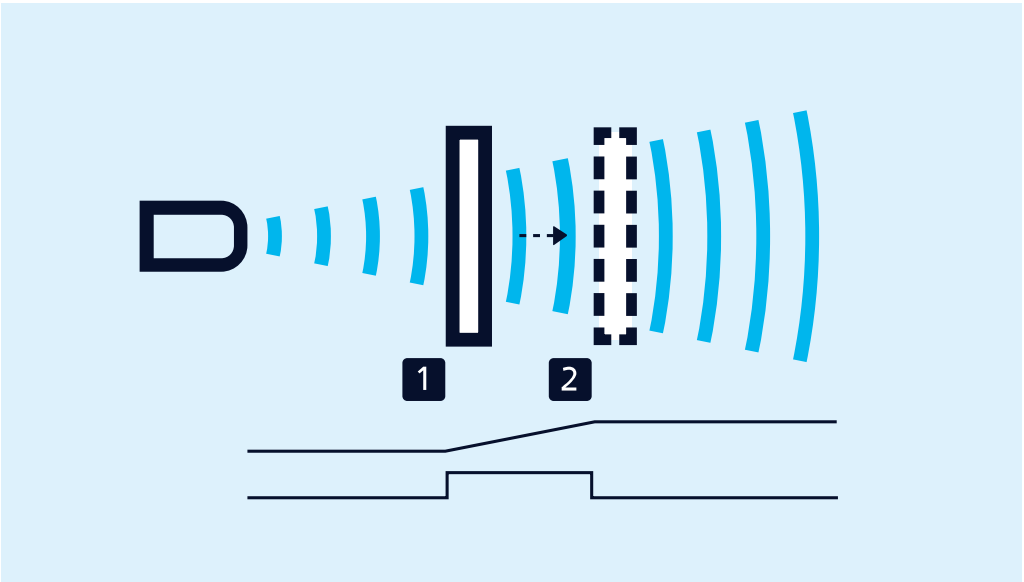

Teach-in of a window with two switching points or of an analogue characteristic

To set a window

with 2 switching points, proceed in the same way as for an analogue output.

NCC/NOC

and rising/ falling analogue characteristic curve can also be set using the button.

SoundPipe sks1

intensively bundles the sound field and allows measurements in openings with small diameters. The SoundPipe sks1 (accessory) is pushed on the transducer of the sks.

IO-Link integrated

in version 1.1 for sensors with Push-Pull output. The sks-15/CF/A supports the Smart Sensor Profile.

You have special requirements?

Nothing as simple as that.

With us, you can easily find an individual solution. Let us talk about your application: +49 231 97 51 51-82.

Archivsensor

sks-15/CE

scale drawing

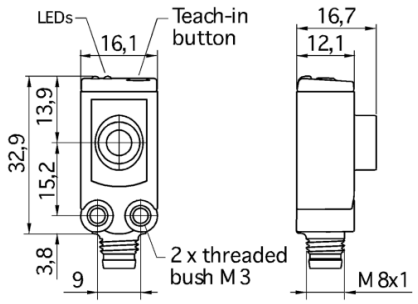

detection zone

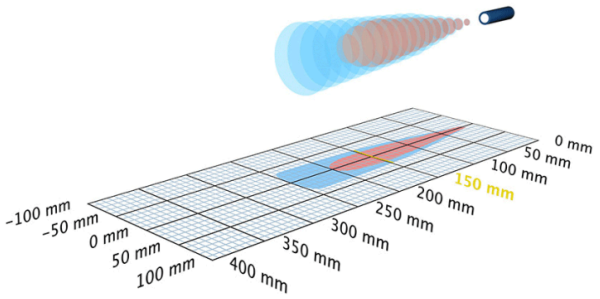

Successor model available	sks-15/CF/A
1 x npn	250 mm
design	cuboidal
operating mode	proximity switch/reflective mode reflective barrier window mode
particularities	kleinste quaderförmige Bauform schlankes Schallfeld UL Listed

Ultrasonic-Specific

means of measurement	echo propagation time measurement
transducer frequency	380 kHz
blind zone	20 mm
operating range	150 mm
max. range	250 mm
resolution	0.10 mm
reproducibility	± 0.15 %
accuracy	± 1 % (temperature drift internally compensated)

Electrical Data

operating voltage U_B	20 - 30 V d.c., reverse polarity protection
voltage ripple	± 10 %
no-load current consumption	≤ 25 mA
type of connection	4-pin M8 initiator plug

Outputs

output 1	switching output npn: I_{max} = 200 mA (-U_B+2V) NOC/NCC adjustable, short-circuit-proof
switching hysteresis	2.0 mm
switching frequency	25 Hz
response delay	32 ms
delay prior to availability	< 300 ms

Inputs

input 1	com input

Housing

material	ABS
ultrasonic transducer	polyurethane foam, epoxy resin with glass contents
class of protection to EN 60529	IP 67
operating temperature	-25°C to +70°C
storage temperature	-40°C to +85°C
weight	8 g

Technical Features/Characteristics

temperature compensation	yes
controls	1 push-button
scope for settings	Teach-in via push-button
synchronization	no
multiplex	no
indicators	1 x LED green: working, 1 x LED yellow: switch status

Accessories

deployable accessory	KST4A-2/M8 KST4A-5/M8 KST4G-2/M8 KST4G-5/M8 SoundPipe sks1