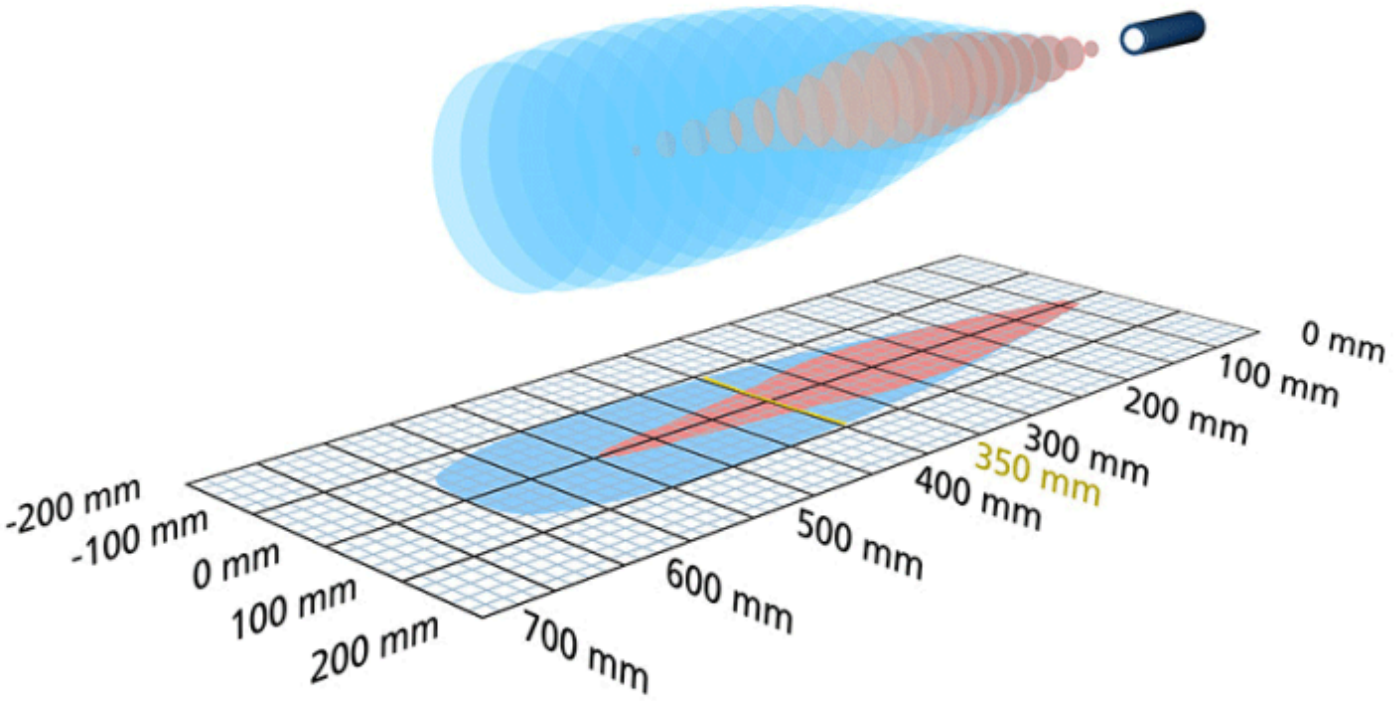

extract from our online catalogue:

wms-35/SI/RT

current to: 2026-11-20

microsonic GmbH / Phoenixseestraße 7 / 44263 Dortmund / Germany / **T** +49 231 975151-0 / **F** +49 231 975151-51 / **E** info@microsonic.de
microsonic® ist eine eingetragene Marke der microsonic GmbH. Alle Rechte vorbehalten. Änderungen vorbehalten.



wms

wms sensors are ideal for customer-driven signal evaluation.

Highlights

Basics

- Trigger input › for control of the ultrasonic transmitter
- Echo output › for customer-provided evaluation in the controller
- 1 echo output › with a load up to 10 mA
- 5 detection ranges with a measurement range of 30 mm to 8 m
- 0.36 mm resolution
- 10–30 V operating voltage

The wms sensors

require connection to the customer's own control and signal evaluation equipment.

wms - the inexpensive alternative

to a self-contained sensor when the sensor must be controlled by the customer's system. A microprocessor control is normally required for this.

The »transmitter« signal input

briefly has to be set to $-U_B$ by the control unit via an open-collector circuit. As a result, an the wms sensor emits a sound pulse for the time of this signal.

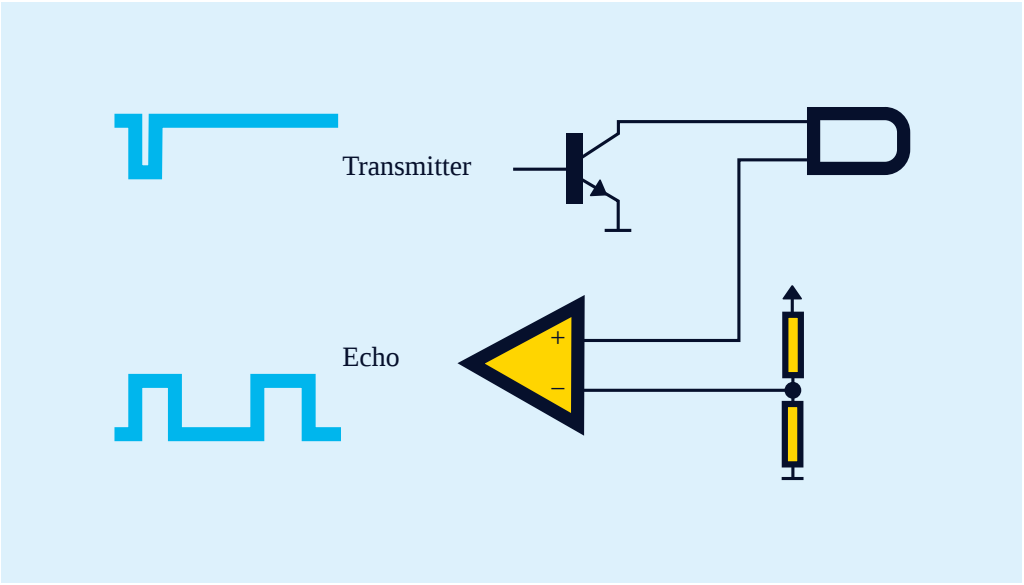

Triggering a wms sensor from the customer's control system

The »echo« signal output

subsequently transmits all echo signals received depending on their duration as 1 bit values (echo yes/no). This takes between 8 and 65 ms depending on the type of sensor. The positive-switched (pnp) output can be loaded with 10 mA. The computation of the distance and subsequent processing is carried out in the customer's control system.

Our project engineers

will be happy to assist you in integrating a wms sensor into your control system.

You have special requirements?

Nothing as simple as that.

With us, you can easily find an individual solution. Let us talk about your application: +49 231 97 51 51-82.

Archivsensor

wms-35/SI/RT

scale drawing

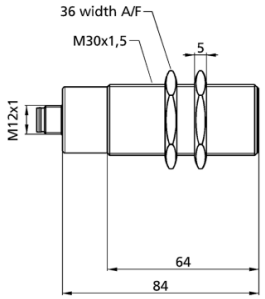

detection zone

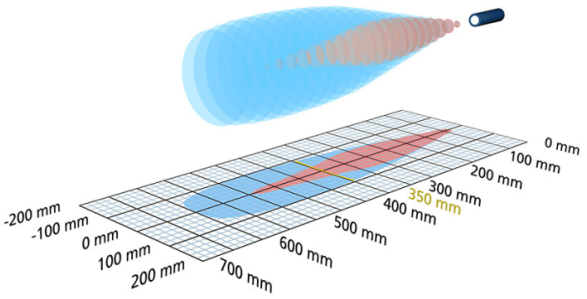

Successor model available	Bitte anfragen
TRIGGER ECHO echo output	600 mm
design	cylindrical M30
operating mode	sensor for evaluators
particularities	high chemical resistance

Ultrasonic-Specific

means of measurement	echo propagation time measurement
transducer frequency	400 kHz
blind zone	65 mm
operating range	350 mm
max. range	600 mm
reproducibility	± 0.15 %
accuracy	temperature drift 0.17 %/K

Electrical Data

operating voltage U_B	9 - 30 V d.c., reverse polarity protection
voltage ripple	± 10 %
no-load current consumption	≤ 30 mA
type of connection	4-pin M12 initiator plug

Outputs

output 1	signal output echo pnp: I_{max} = 10 mA (signal output echo)

Inputs

input 1	signal input - transmitter

Housing

material	brass sleeve, nickel-plated, plastic parts, PBT
ultrasonic transducer	polyurethane foam, epoxy resin with glass contents
class of protection to EN 60529	IP 65
operating temperature	-20°C to +70°C
storage temperature	-40°C to +85°C
weight	200 g

Technical Features/Characteristics

controls	no
scope for settings	no
synchronization	yes
multiplex	yes
indicators	no

Accessories

deployable accessory	KST4A-2/M12 KST4A-5/M12 KST4G-2/M12 KST4G-5/M12

pin assignment

