microsonic



extract from our online catalogue:

wms-501/RT

current to: 2026-11-19

microsonic GmbH / Phoenixseestraße 7 / 44263 Dortmund / Germany / **T** +49 231 975151-0 / **F** +49 231 975151-51 / **E** info@microsonic.de
microsonic® ist eine eingetragene Marke der microsonic GmbH. Alle Rechte vorbehalten. Änderungen vorbehalten.

Archivsensor

wms-501/RT

scale drawing

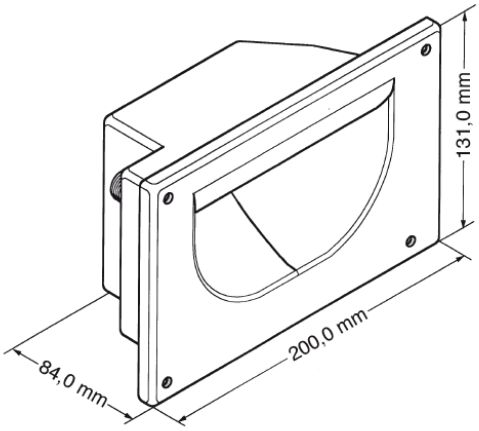

detection zone

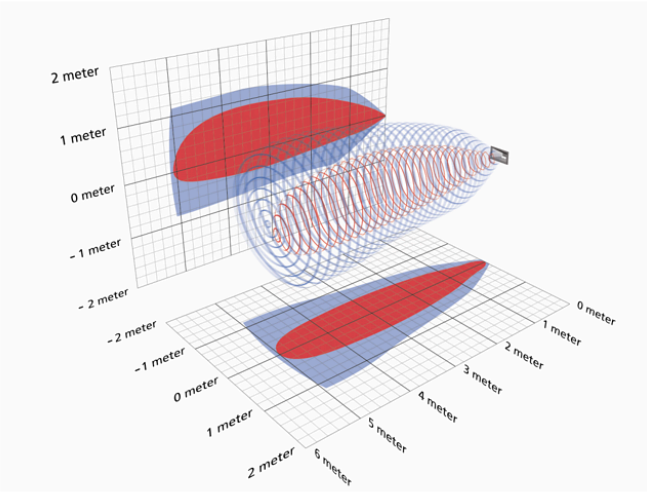

Successor model available	please inquire

TRIGGER ECHO echo output	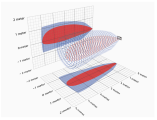 5,000 mm

design	cuboidal
operating mode	sensor for evaluators
particularities	asymmetrical sound field

Ultrasonic-Specific

means of measurement	echo propagation time measurement
transducer frequency	40 kHz
blind zone	100 mm
operating range	4,000 mm
max. range	5,000 mm
reproducibility	± 0.15 %
accuracy	temperature drift 0.17 %/K

Electrical Data

operating voltage U_B	10 - 30 V d.c., reverse polarity protection
voltage ripple	± 10 %
no-load current consumption	≤ 30 mA
type of connection	4-pin M12 initiator plug

Outputs

output 1	signal output echo pnp: I_{max} = 10 mA (signal output echo)

Inputs

input 1	signal input - transmitter

Housing

material	polystyrene
ultrasonic transducer	polyurethane foam, epoxy resin with glass contents
class of protection to EN 60529	IP 54
operating temperature	-10°C bis +50°C
storage temperature	-20°C to +70°C
weight	530 g

Technical Features/Characteristics

temperature compensation	no
controls	no
scope for settings	no
synchronization	yes
multiplex	yes
indicators	no

Accessories

deployable accessory	KST4A-2/M12 KST4A-5/M12 KST4G-2/M12 KST4G-5/M12

pin assignment

