

Estratto dal nostro catalogo online:

SoundPipe sks1

Aggiornato al: 2026-11-19

microsonic GmbH / Phoenixseestraße 7 / 44263 Dortmund / Germany / **T** +49 231 975151-0 / **F** +49 231 975151-51 / **E** info@microsonic.de
microsonic® ist eine eingetragene Marke der microsonic GmbH. Alle Rechte vorbehalten. Änderungen vorbehalten.

SoundPipe sks1

Disegno in scala

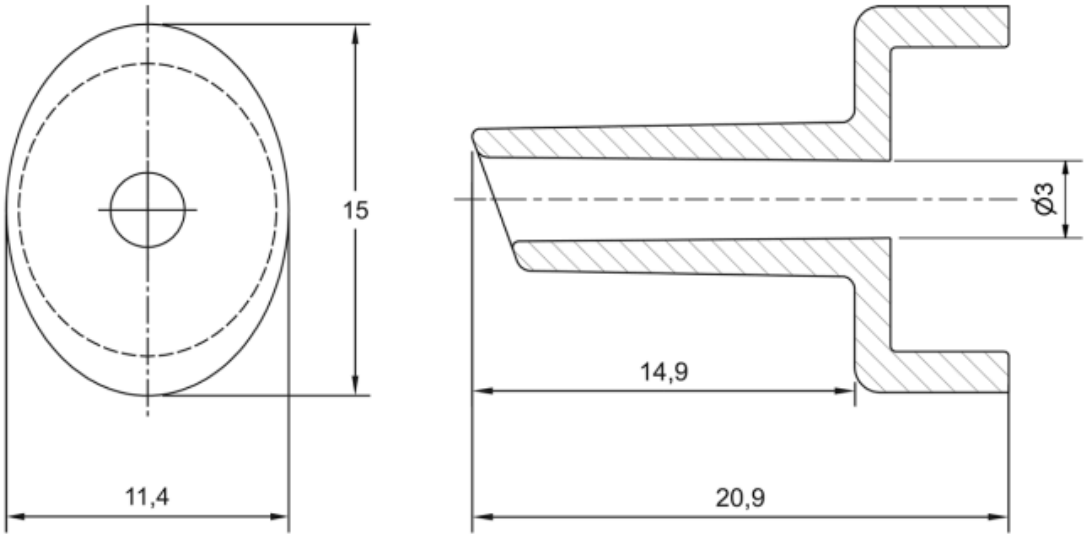

Modo operativo	accessori

Custodia

Materiale	PES
Peso	1 g

Accessori

Accessori utilizzabili	SoundPipe for sks ultrasonic sensors. SoundPipe sks1 intensively bundles the sound field and allows measurements in drill holes and openings with small diameters. Push the SoundPipe down on the transducer until it is flush with the sensor housing. Avoid axial tensile force on the SoundPipe, otherwise the SoundPipe may dismantle from the sks sensor.