

온라인 카탈로그 발췌:

BF-pms/A1

최신 버전: 2026-11-19

microsonic GmbH / Phoenixseestraße 7 / 44263 Dortmund / Germany / **T** +49 231 975151-0 / **F** +49 231 975151-51 / **E** info@microsonic.de
microsonic® ist eine eingetragene Marke der microsonic GmbH. Alle Rechte vorbehalten. Änderungen vorbehalten.

BF-pms/A1

축척 도면

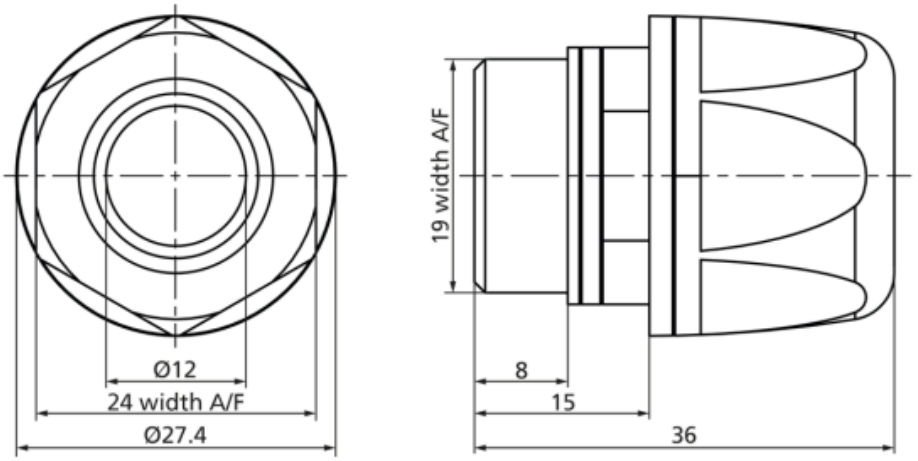

작동 모드/기본 기능	액세서리
특이성	High chemical resistance Stainless steel construction Hygienic Design ECOLAB EHEDG (TYPE EL Class I AUX)

하우징

재질	stainless steel plastic parts: FKM, PA
EN60529에 따르는 보호등급	IP 69
동작온도	-20°C to +100°C

액세서리

분리가능 액세서리	pms-100/CF/A1 pms-100/CI/A1 pms-100/CU/A1 pms-15/CF/A1 pms-15/CI/A1 pms-15/CU/A1 pms-25/CF/A1 pms-25/CI/A1 pms-25/CU/A1 pms-35/CF/A1
분리가능 액세서리	Hygienic screw connection in stainless steel with smooth surfaces for pms sensors with D12 adapter shaft.