microsonic



Выдержка из нашего онлайн-каталога:

esf+1/CFF/Pro

По состоянию на: 2026-11-20

microsonic GmbH / Phoenixseestraße 7 / 44263 Dortmund / Germany / **T** +49 231 975151-0 / **F** +49 231 975151-51 / **E** info@microsonic.de
microsonic® ist eine eingetragene Marke der microsonic GmbH. Alle Rechte vorbehalten. Änderungen vorbehalten.



esf+1 ultrasonic label sensor

The esf+1 ultrasonic label sensor reliably detects transparent, reflective and metallised labels at high web speeds. Designed for installation at the dispensing edge, it enables precise non-contact label detection in label

Highlights

- Slim lower leg › for positioning close to the dispensing edge
- Flat sensor surfaces › for easy cleaning
- Measurement cycle time ≥ 150 µs › for use at high web speeds
- Robust high-tech plastic housing › with metal-like properties
- M12 connector can be rotated 90° › for flexible installation
- Asymmetrical mounting adapter for 2 installation positions › Mounting on the left or right of the dispensing edge
- Simple Teach-in › label Teach-in with a single button press
- IO-Link interface › for support of the new industry standard
- Recipe management via IO-Link › no need to re-teach materials

Basics

- Label and splice sensor as a fork sensor
- 2 Push-Pull switching outputs › for label detection and web break monitoring
- 3 LEDs and 1 button on the top of the housing
- LinkControl › as optional assistance for installation and commissioning

The ultrasonic label sensor esf+1

can reliably detect high-transparency, reflective and metallised labels without contact, regardless of colour. It can detect materials with grammages ranging from 20 g/m2 to 600 g/m2, as well as metal and plastic films up to 0.3 mm thick. For thin labels and backing materials, the esf+1 can work at its maximum speed, with a measurement cycle time of ≥ 150 µs.

The esf+1 is available in two versions:

- The **Pro version** detects all standard labels at the highest switching frequency of 500 kHz.
- The **Expert version** (Exp) with 200 kHz is the specialist for labels that are difficult to detect.

The Pro and Expert versions are identical in design. They can be easily exchanged with each other.

Recommendation: With a measurement cycle time of 150 µs, the Pro version is the faster option and should always be the first choice for label recognition. If labels are not recognised using the Pro version, the Expert version should be used.

Mounting close to the dispensing edge

The very flat design of the lower fork leg allows the material to be positioned close to the dispensing edge.



Label sensor for installation close to the dispensing edge

Easy to clean

The flat fork legs mean that it has no pinholes or hard-to-reach niches or hollows where dirt can accumulate.

M12 connector can be pivoted by 90°

In this way, the connection line can be led to the sensor from behind or, to save space, from above.



Label sensor with rotating M12 connector

Mounting adapter for two fitting positions

The asymmetrical mounting adapter can be inserted in 2 directions, thereby allowing it to be positioned optimally to the right and left of the dispensing edge.



Precise detection of labels and splices

How ultrasonic label detection works

Labels are guided through the fork. An ultrasonic transmitter in the lower leg of the fork beams a fast sequence of pulses through the backing material (liner material/carrier web). The sound pulses cause the backing material to vibrate such that a greatly attenuated sound wave is beamed from the opposite side. The receiver in the upper leg of the fork receives this sound wave.

The liner material transmits a different signal level from the label. This signal difference is evaluated by the esf+1. The signal difference between the liner material and the label can be very slight. To ensure a reliable distinction, the esf+1 has to learn the label and backing material.

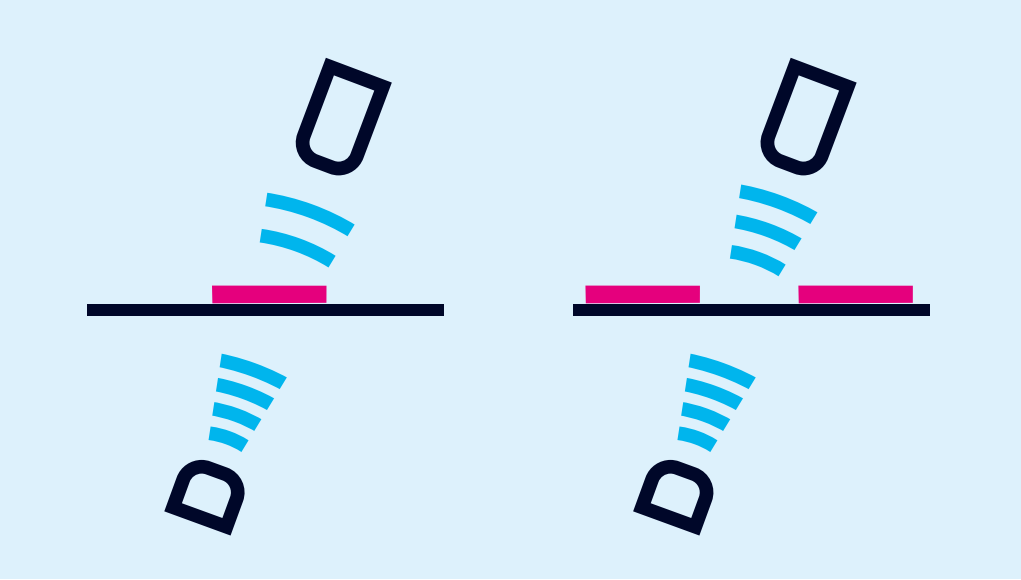

Functional principle of the label sensor: Backing material with a label provides an attenuated signal level

Applications of the esf+1

- Packaging machines
- Print & apply systems
- Converting machines
- Labelling systems
- Use with highly transparent, reflective and metallised labels
- Seam detection on paper, plastic or metal webs
- Web break monitoring
- Label counting

Simple Teach-in

The label material can be taught-in very easily with the aid of the button.

1) Dynamic Teach-in of labels

During the Teach-in process, the carrier web and its labels are guided through the fork at a constant speed. The esf+1 sensor automatically learns the signal level for the labels and for the gaps between the labels. This is the standard Teach-in for labels.

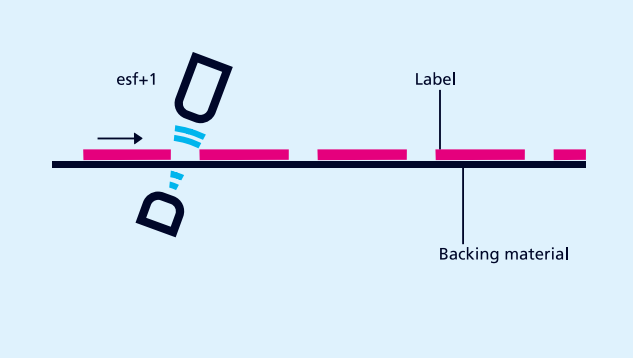

esf+1 for non-contact label detection

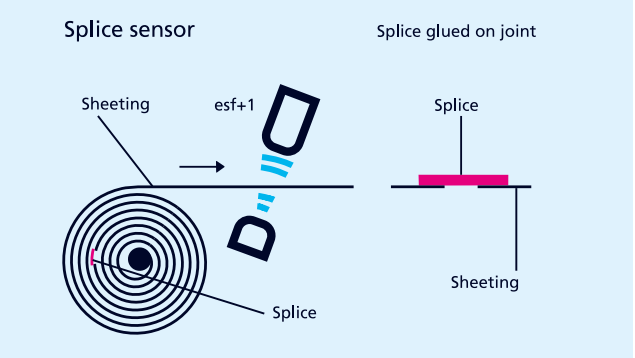

esf+1 for non-contact splice detection

2) Teach-in for splice detection

Web material is generally processed from a roll. The splice to be detected is hidden somewhere in the roll. There is a separate Teach-in method available for this purpose, in which only the sheeting is learned. The esf+1 detects the level difference at the splice and sets its output.

The Teach-in procedure

can optionally be carried out with the button on the top of the housing or with pin 5 on the unit's connector.

With LinkControl

the esf+1 can optionally be parameterised. Measured values can also be shown graphically.

IO-Link and recipe management for fast product changes

esf+1 ultrasonic label and splice sensors have a Push-Pull switching output and support IO-Link in version 1.1.5.

The sensor features an integrated recipe management via IO-Link. Up to 20 different labels with backing material can be learned, and the material parameters can be saved directly in the sensor. In addition, material parameters for splice detection can also be saved in the recipe management, ensuring that material transitions are detected and processed.

All saved settings can be accessed at any time. The integrated recipe management reduces setup times and minimises machine downtime during product changes. There is no need to Teach-in the materials again.

Reliable label detection at high web speeds

The esf+1 ultrasonic label sensor reliably detects highly transparent, reflective and metallised labels without contact, regardless of colour. With a measurement cycle time of just 150 µs, the sensor is suitable for highly dynamic labelling processes and short label spacing. The flat design allows for mounting directly on the dispensing edge, whilst IO-Link and integrated recipe management support quick product changes without the need for re-teaching.

У вас есть особые условия?

Нет ничего проще.

С нами Вам удастся легко найти индивидуальное решение.
Давайте поговорим о Вашей задаче.: +49 231 97 51 51-55.

esf+1/CFF/Pro

Масштабный чертеж

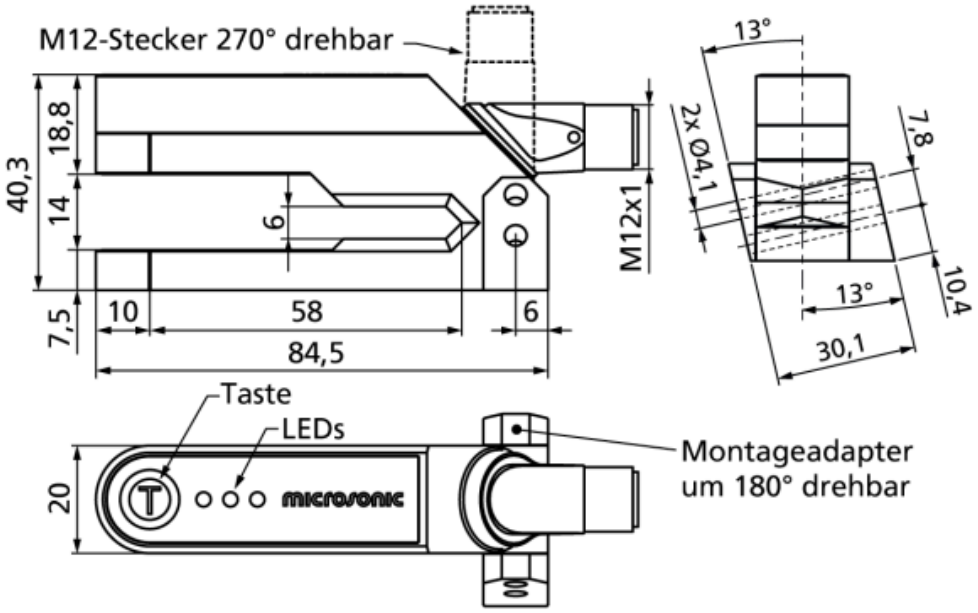

2 x Push-Pull

Модель	gabelförmig
Режим работы	IO-Link обнаружение метки/стыка
Особенности	Flat fork leg Mounting adapter for 2 mounting positions Swivelling M12 connector IO-Link Recipe management Measurement cycle time ≥ 150 µs to 2 ms (depending on material)

Ультразвуковых конкретных

Средств измерений	импульсном режиме с оценкой амплитуды
Преобразователь частоты	500 kHz

Электрические данные

Рабочее напряжение U_B	20 - 30 VDC, защита от обратной полярности
Пульсации напряжения	± 10 %
Ток холостого потребления	≤ 50 mA
Тип соединения	5-контактным разъемом M12 инициатора

Выходы

Выход 1	релейный выход web ошибка Push-Pull, U_B-1 V, -U_B+1 V, I_{max} = 100 mA защита от короткого замыкания
Ausgang 2	релейный выход, метка/стык обнаружены Push-Pull, U_B-1 V, -U_B+1 V, I_{max} = 100 mA НЗК/НОК выбираемые, защита от короткого замыкания
Время реакции	≥ 260 µs
Задержка до наличия	< 300 ms

Входы

Вход 1	Вход COM порт teach-in вход

Корпус

Материал	PA-GF50
Ультразвукового преобразователя	полиуретановой пены, эпоксидной смолы с содержанием стекла
Класс защиты по EN 60529	IP 65
Рабочая температура	+5°C до +60°C
Температура хранения	-40 ° C до +85 ° C
Вес	60 g

Технические характеристики/характеристики

Управления	1 push-button com input
Возможности для настройки	Режим «обучения» через кнопки режим «обучения» через COM вход на контакт 5 LCA-2 с LinkControl IO-Link
Synchronisation	да
Индикаторы	1 x LED grün: Power, 1 x LED gelb: Output, 1 x LED rot: Error

Аксессуары

Развертываемые аксессуары	KST5A-2/M12 KST5A-5/M12 KST5G-2/M12 KST5G-5/M12 LCA-2 LCA-2 Koffer

Назначение контактов

